SPARE PART CATALOG

Corpus

for C400

Seating system for Permobil power wheelchair

Corpus

Spare Part Catalog
Reservdelskatalog

CONTACT PERMOBIL:

Permobil AB
Box 120
861 23 Timrå
Sverige
Tel: 060-59 59 00
Fax: 060-57 52 50
E-post: info@permobil.se

Permobil Inc. USA
6961 Eastgate Blvd.
Lebanon, TN 37090
USA
Phone: 800-736-0925
Fax: 800-231-3256
Email: info@permobilusa.com

Permobil AS
Hvamsvingen 22
2013 Skjetten
Norge
Tlf. 48 12 90 00
Fax. 63 84 48 50
E-post: firmapost@permobil.no

Permobil Europe BV
De Doom 22
NL-6419 CX Heerlen
Netherlands
Tel: +31 (0)45 564 54 90
Fax: +31 (0) 45 564 54 91
Email: europe@permobil.nl

Produced and published by Permobil AB, Sweden
Edition no. 1, 2009-02
PAB: 1258-1

Contents **Page**

Seat frame.....6 - 7
Seat mounting kit .....8 - 9
Seat extensions.....10 - 11
Tilt 20° Lowrider .....12 - 13
Tilt 30° .....14 - 15
Tilt 45° .....16 - 17
Backrest .....18 - 19
Backrest recline options .....20 - 21
Armrest .....22 - 23
Panelhollders .....24 - 25
Cushions .....26 - 27
Legrest .....28 - 29
Legrest recline options .....30 - 31
P+ Electronics .....32 - 33
R-net Electronics.....34 - 35
Ordering Information .....36 - 37

Innehåll **Sida**

Sitsram ..... 6 - 7
Sitsmonteringssats ..... 8 -9
Sitsförstoring/förkortning ..... 10 - 11
Sitslutning 20° Lowrider ..... 12 - 13
Sitslutning 30° ..... 14 - 15
Sitslutning 45° ..... 16 - 17
Ryggstöd ..... 18 - 19
Ryggstöds regleringar ..... 20 - 21
Armstöd ..... 22 - 23
Panelhållare ..... 24 - 25
Dyner ..... 26 - 27
Benstöd ..... 28 - 29
Benstöds regleringar ..... 30 - 31
P+ elektronik ..... 32 - 33
R-net elektronik ..... 34 - 35
Beställningsinformation ..... 38 - 39

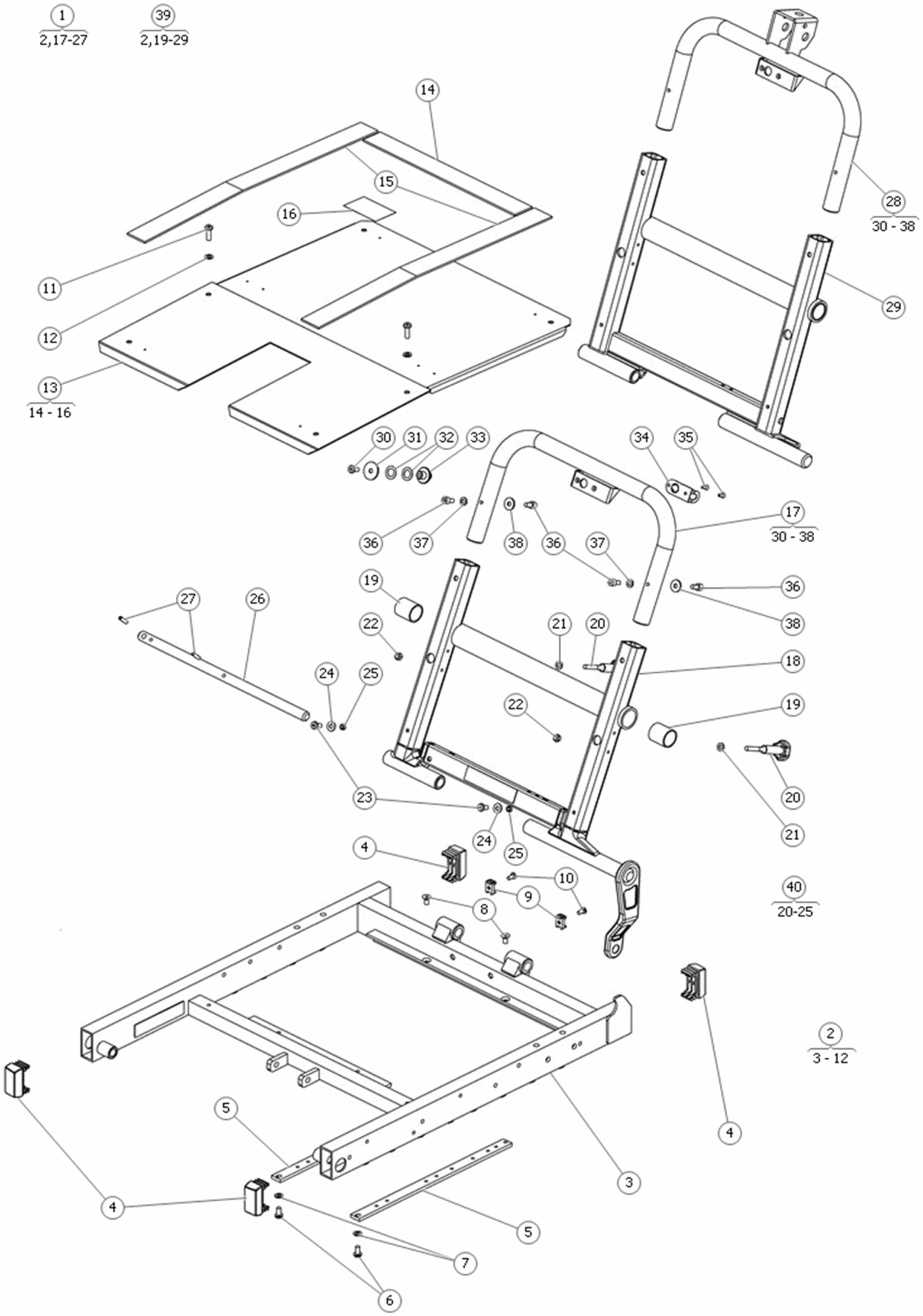
1
2,17-27
39
2,19-29
14
15
16
11
12
13
14 - 16
28
30 - 38
29
30
31
32
33
34
35
17
30 - 38
36
37
38
36
37
36
38
19
27
26
22
21
20
18
24
25
22
19
20
21
23
24
25
4
10
9
8
40
20-25
2
3 - 12
5
4
3
4
5
7
6

Pos	Qty	Stock Code	Description	Remark
1	1	305500-28-80-0	SEAT CII FRAME KIT	
1	1	305500-28-UD-0	SEAT FRAME CII	
2	1	301573-28-0	SEAT FRAME CII	
2	1	301573-28-0	SEAT FRAME CII	
2	1	301573-38-0	SEAT FRAME C II	
3	1		FRAME	
4	4	1821420	PLAST.PLUG SEATFRAME CII	
5	2		BRACKET	
6	2	601353-99-0	BOLT K6S 5x10 fzb	
7	2	600237-99-0	WASH BRB 5.3x10x 1 fzb	
8	1	601708-99-0	BOLT MF6S 5x10 fzb	
9	2	601204-99-0	CABLE TIE HOLD TM 2 S8	
10	2	601436-99-0	BOLT MRX-TT-Z 4x8 fzb	
11	2	601170-99-0	BOLT K6S 5x16 fzb	
12	2	600237-99-0	WASH BRB 5.3x10x 1 fzb	
13	1	305188-28-0	SEAT PLATE MOVEABLE CII	
13	1	305188-38-0	SEAT PLATE MOVEABLE CII	
14	1060	600587-99-0	VELCRO HOOK SELF.ADHES	
15	1060	600587-99-0	VELCRO HOOK SELF.ADHES	
16	1		DEKAL	
17	1	306072-28-0	BACKR REINFORCEMENT V.2	
18	1	1822200	BACKREST HINGE CII	Use for R-net chairs.
18	1	1822976	BACKR HINGE CII 180°	
18	1	305196-28-0	BACKR HINGE CII	Use for Pilot+ & earlier chairs.
19	2	601844-99-0	SLIDE BEAR 202325 A	
20	2	306387-00-0	STAR HANDLE BACKR CII	
21	2	600842-99-0	WASH BRB 5.3x12x 1 fzb	
22	2	600226-99-0	LOCK NUT M5 FZB	
23	2	601353-99-0	BOLT K6S 5x10 fzb	
24	2	600237-99-0	WASH BRB 5.3x10x 1 fzb	
25	2	306081-99-0	SPACER 3 Ý 7/5	
26	1	302521-99-0	SHAFT BACKREST HINGE CII	
27	2	601124-99-0	EXPANDER PIN FRP 4x16	
28	1	308085-28-0	REINF.KIT BACKR. CII	
29	1	309016-28-0	BACKR HINGE MID.MOUNT CII	
30	1	601353-99-0	BOLT K6S 5x10 fzb	
31	1	601935-99-0	WASH SRKB 5.5x22x1.5	
32	2		SHIM WASHER 10x16x0.5 DIN 988	
33	1	306068-99-0	QUICK LOCK PIN BACK CII	
34	1	601375-99-0	QUICKLOCK SERIE 1500	
35	2	601972-99-0	DUMMY RIVET TAP/K 44 BS	
36	4	600189-99-0	BOLT MC6S 5x10 fzb	
37	2	600237-99-0	WASH BRB 5.3x10x 1 fzb	
38	1	612857-99-0	WASHER 5,3x15x1 FZB ISO	
39	1	309040-28-UD-0	SEAT CII FRAME KIT	
40	1	306790-99-0	BOLT KIT BACK CII	

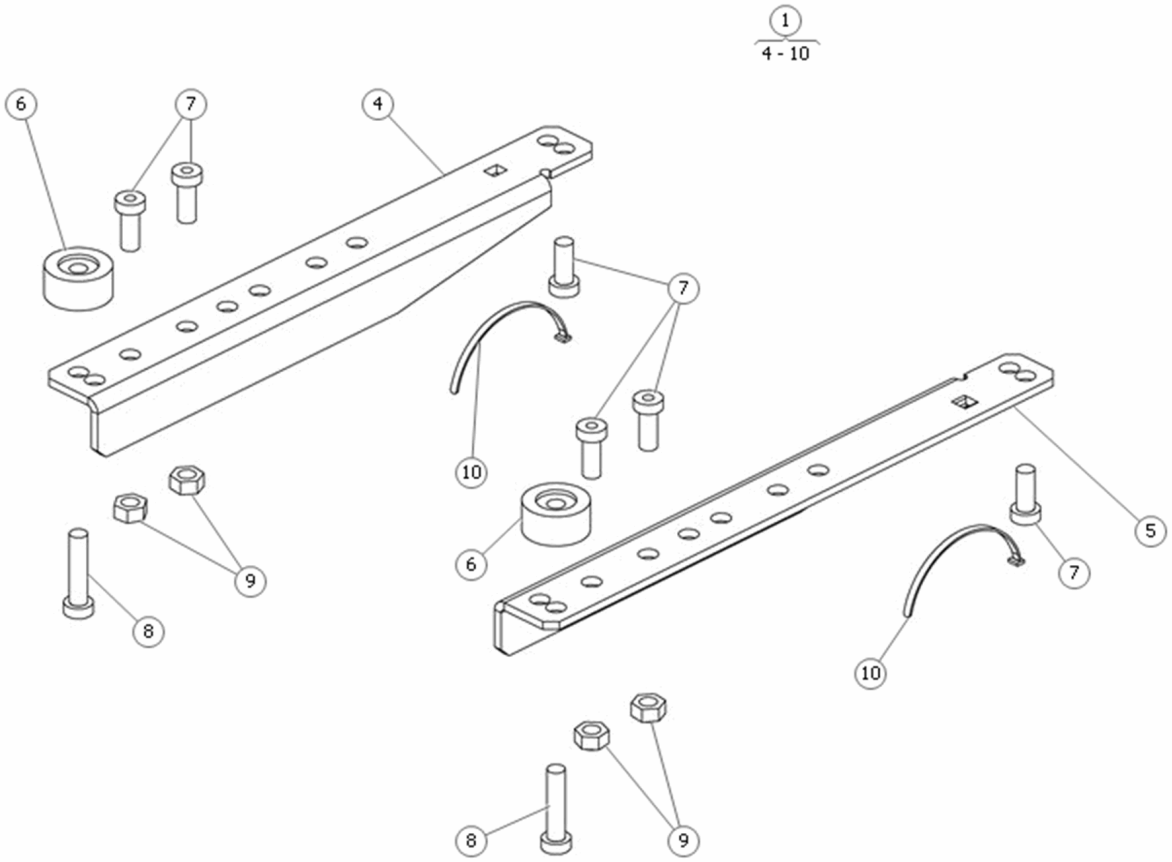
1
4 - 10
6
7
4
7
10
6
9
8
5
7
10
8
9

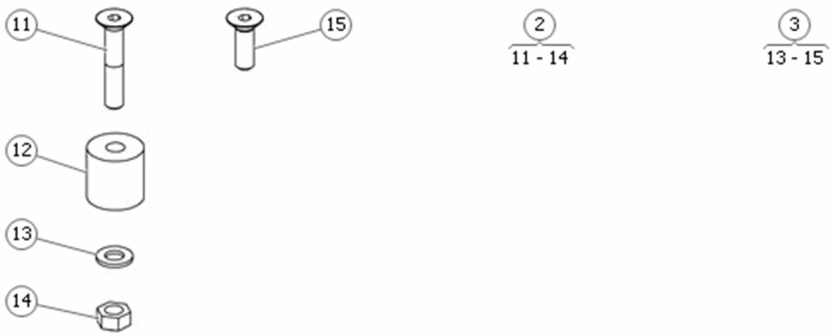
11
15
2
11 - 14
3
13 - 15
12
13
14

Pos	Qty	Stock Code	Description	Remark
1	1	303595-99-0	MOUNT.SET CORPUS M90 S90	
2	1	310238-99-0	INSTAL KIT LOW CH2k	
3	1	310239-99-0	INSTALL KIT HIGH CH2k	
4	1		PLATE, RIGHT	
5	1		PLATE, LEFT	
6	2		SPACER O30/8.2/15	
6	2		SPACER Ø30/8.2/15	
7	6		USE 601450-99-0 BOLT MLC6S 8x20 fzb	
7	6	601450-99-0	BOLT MLC6S 8x30 fzb	
8	2	601947-99-0	BOLT MLC6S 8x35 fzb	
9	4	600228-99-0	LOCK NUT M8 FZB	
10	2	600136-00-0	CABLE TIE SST1M 2.4x102	
11	4	601926-99-0	BOLT MF6S 8x50 fzb	
12	4		SPACER, 8,2x25x25	
13	4	600239-99-0	WASHER BRB 8.4X16 FZB	
14	4	600228-99-0	LOCK NUT M8 FZB	
15	4	600744-99-0	BOLT MF6S 8x25 fzb	

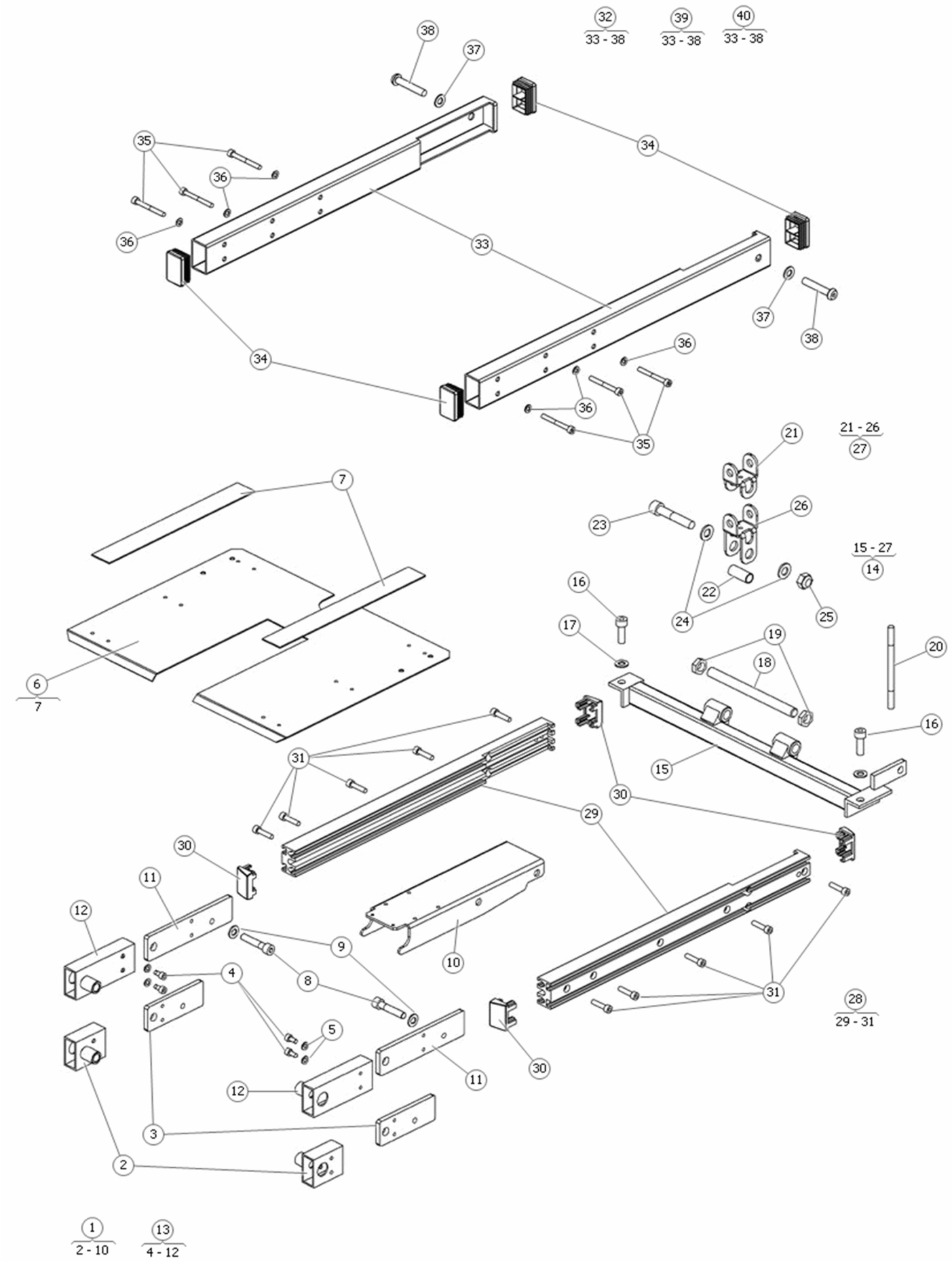
32
33 - 38
39
33 - 38
40
33 - 38
21 - 26
27
15 - 27
14
6
7
28
29 - 31
1
2 - 10
13
4 - 12

Pos	Qty	Stock Code	Description	Remark
1	1	305255-28-0	SEAT EXT +50 CII	
2	2	303169-28-0	SEAT EXT SECTION +50 CII	
3	2		PLATE	
4	4	600189-99-0	BOLT MC6S 5x10 fzb	
5	4	600237-99-0	WASH BRB 5.3x10x 1 fzb	
6	1	305247-28-0	SEAT PLATE EXT +50/+100	
7	2	600587-99-0	VELCRO HOOK SELF.ADHES	
8	2	600274-99-0	BOLT MC6S 8x 40 fzb	
9	2	600239-99-0	WASHER BRB 8.4X16 FZB	
10	1	305235-99-0	SLIDE BAR FOOT/LEGREST	+50
10	1	305236-99-0	SLIDE BAR FOOT/LEGREST	+100
11	2		PLATE	
12	2	303172-28-0	SEAT EXT SECTION +100 CII	+100
12	2	309254-28-0	SEAT EXT KIT +100 HD	+100
13	1	305260-28-UD-0	SEAT EXTENSION KIT +100	
14	1	305265-28-0	SEAT REDUC -50 PLG ARMR	
15	1		SEAT REDUC	
16	2	600499-99-0	BOLT MC6S 8x 25 fzb	
17	2	600239-99-0	WASHER BRB 8.4X16 FZB	
18	1		BAR, M12	
19	2	600759-99-0	NUT ML6M 12x1.5 fzb	
20	1	303716-99-0	BOLT PS 8x115 fzb	
21	1		BRACKET	
22	1	302330-99-0	ACTUATOR BUSSING 30MM	
23	1	601231-99-0	BOLT MC6S 10x 55 fzb	
24	2	600241-99-0	WASH BRB 10.5x20x2 fzb	
25	1	600229-99-0	LOCK NUT M10 fzb ISO 7040	
26	1		BRACKET	
27	1	308594-99-0	ACTU.BRACK.LOWER SEAT	
28	1	1822380	BAR UNITRAC CII STD	
28	1	1822381	BAR UNITRAC CII +50	
28	1	1822382	BAR ACCESSORIE UNITRAC	
28	1	1822383	BAR ACCESSORIE UNITRAC	
28	1	1822384	BAR ACCESSORIE UNITRAC	
28	1	1822385	BAR ACCESSORIE UNITRAC	
29	2		WIDE TRACK (+50)	
30	4	1824302	PLASTPL 25x40	
31	10	600195-99-0	BOLT MC6S 6x25 fzb	
32	1		SEAT WIDE +50	
33	2		TUBE	
33	2		TUBE	
33	2		TUBE	
34	4	601896-00-0	PLAST PLUG VL 40x25	
35	6	601193-99-0	BOLT MLC6S 5X45 BLACK	
35	6	602362-99-0	BOLT MC6S 5x45 fzb	
36	6	600237-99-0	WASH BRB 5.3x10x 1 fzb	
37	2	601884-99-0	BOLT K6S 8x45 fzb	
38	2	600239-99-0	WASHER BRB 8.4X16 FZB	
39	1		SEAT WIDE +50/L=+50	
40	1		SEAT WIDE +50/L=+100	

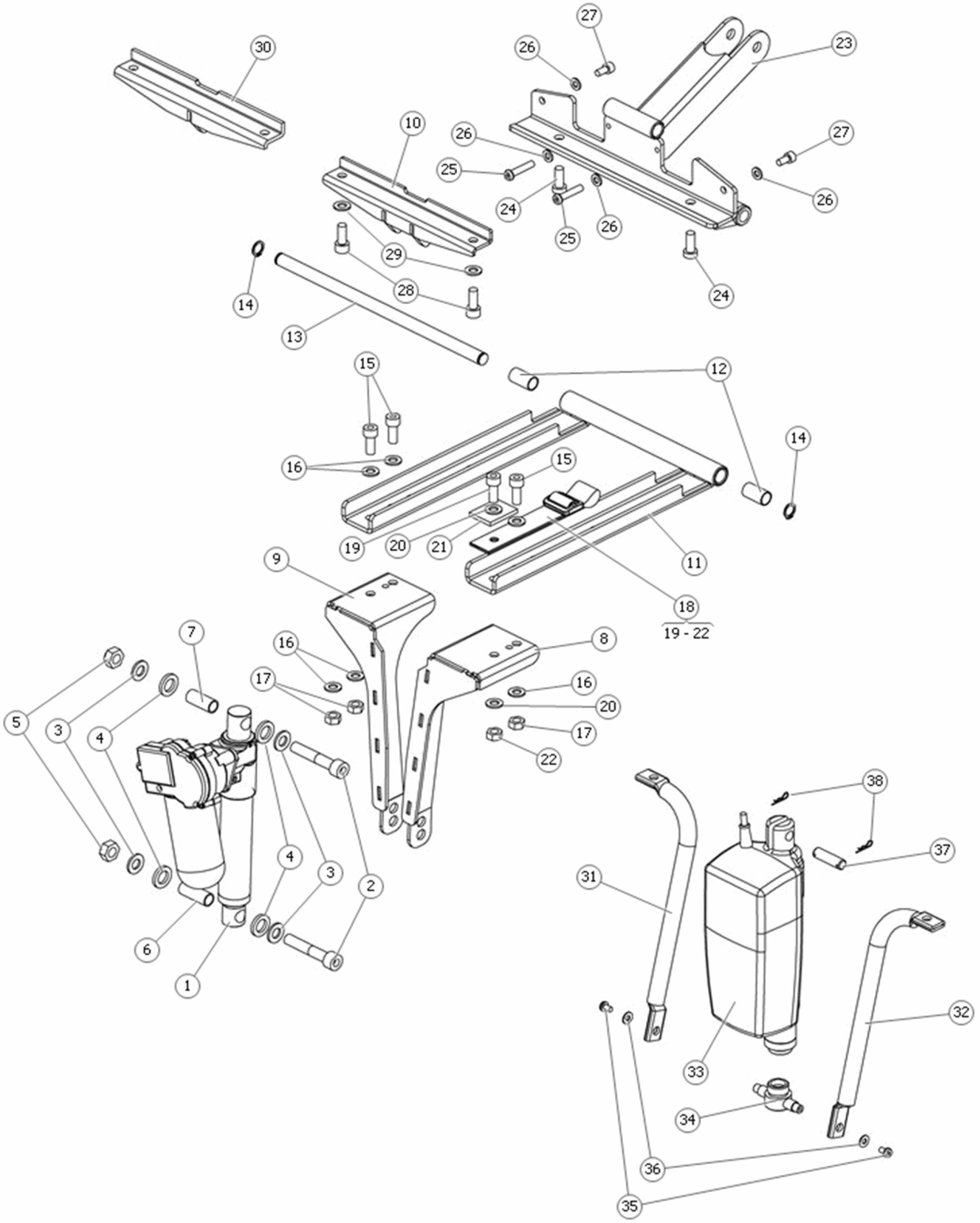
30
27
26
23
10
26
27
25
26
24
25
26
29
28
24
14
13
15
12
14
16
15
19
20
21
11
9
18
19 - 22
7
16
8
17
16
20
5
3
4
17
22
38
37
31
4
3
2
6
1
32
33
34
36
35

Pos	Qty	Stock Code	Description	Remark
1	1	1824123	ACTU ICS TILT 20° LOW-	
2	2	601231-99-0	BOLT MC6S 10x 55 fzb	
3	4	600241-99-0	WASH BRB 10.5x20x2 fzb	
4	4	1825286	WASHER 13,5x22x3 PE BLACK	
5	2	600229-99-0	LOCK NUT M10 fzb ISO 7040	
6	1	302988-99-0	ACTU SLEEVE 34	
7	1	302330-99-0	ACTUATOR BUSSING 30MM	
8	1		BRACKET TILT 20° LEFT	
9	1		BRACKET TILT 20° RIGHT	
10	1		BRACKET TILT 20°	
11	1		FRAME TILT 20°	
12	2	602186-99-0	SLIDE BEAR 121425 F	
13	1		SHAFT HINGE	
14	2	601225-99-0	CIRCLIP SGA 12	
15	3	600203-99-0	BOLT MC6S 8x 20 fzb	
16	6	600239-99-0	WASHER BRB 8.4X16 FZB	
17	3	600228-99-0	LOCK NUT M8 FZB	
18	1	307139-99-0	SAFETY STOP SEAT TILT	
19	1	600880-99-0	BOLT MC6S 8X30 FZB	
19	1	601075-99-0	BOLT ESLOK 8x30 fzb	
20	2	600239-99-0	WASHER BRB 8.4X16 FZB	
21	1		WASH Ø9 20x30 t=5	
22	1	600228-99-0	LOCK NUT M8 FZB	
23	1	1820414	REAR HINGE SEAT TILT 20°	
24	2		USE 601450-99-0 BOLT MLC6S 8x20 fzb	
24	2	601450-99-0	BOLT MLC6S 8x30 fzb	
25	1	601372-99-0	BOLT K6S 6x45 fzb	
25	1	602035-99-0	BOLT K6S 6x30 fzb	
26	4	600238-99-0	WASHER BRB 6.4X12 FZB	
27	2	600192-99-0	BOLT MC6S 6x12 fzb	
28	2	600203-99-0	BOLT MC6S 8x 20 fzb	
29	2	600239-99-0	WASHER BRB 8.4X16 FZB	
30	1		BRACKET ACTU P+	
31	1		BRACKET ACTU P+ RIGHT	
32	1		BRACKET ACTU P+ LEFT	
33	1	310240-99-0	ACTU SEAT TILT 20° CH2k	
34	1		BRACKET ACTUATOR	
35	2	601187-99-0	BOLT K6S 4x10 fzb	
36	2	600829-99-0	WASH BRB 4.3x12x 1 fzb	
37	1		SHAFT 10x35	
38	2		HITCH PIN CLIP Ø2	

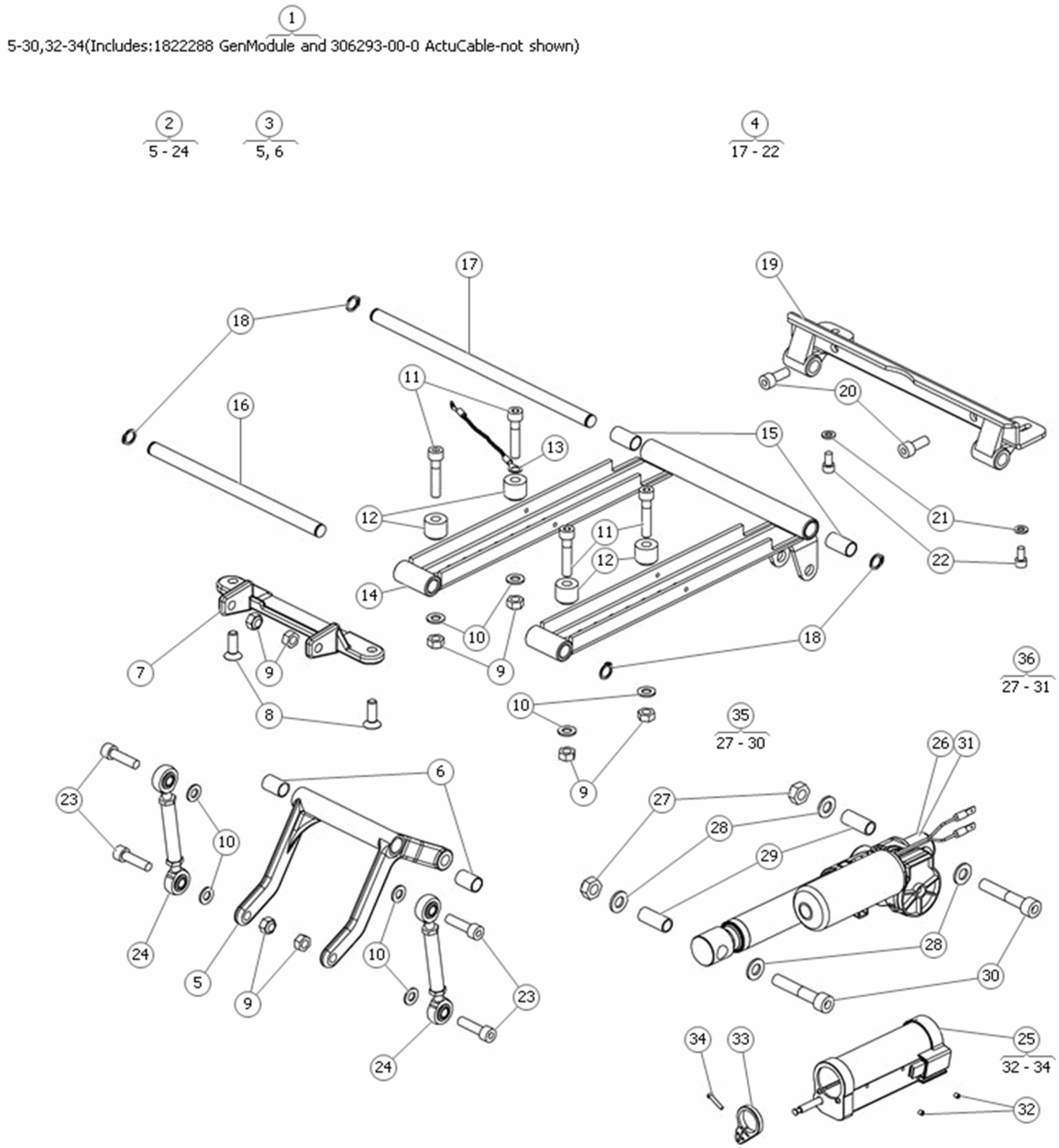
1
5-30,32-34(Includes:1822288 GenModule and 306293-00-0 ActuCable-not shown)
2
5 - 24
3
5, 6
4
17 - 22
36
27 - 31
35
27 - 30
25
32 - 34

Pos	Qty	Stock Code	Description	Remark
1	1	1824741	SEAT TILT R-NET 30°	Incl. Stock Code 1822288 and 306293-00-0 (not pict…
2	1	305204-40-0	SEATTILT 30 GRD.	
3	1	1821711	SEAT FRONT HINGE SEATTILT	
4	1	308835-40-0	REAR HINGE SEAT TILT 30°	
5	1		GUIDE ARM	
6	2	602187-99-0	SLIDE BEAR 121420 F	
7	1	302681-40-0	SEAT MOUNT SEATTILT	OBSOLETE WHEN ZERO INVENTORY
8	2	600744-99-0	BOLT MF6S 8x25 fzb	
9	8	600228-99-0	LOCK NUT M8 FZB	
10	8	600239-99-0	WASHER BRB 8.4X16 FZB	
11	4	600274-99-0	BOLT MC6S 8x 40 fzb	
12	4	303739-99-0	SPACER 18 SEAT TILT	
13	1	306124-00-0	CABLE GALVANIC JUNCTION	
14	1	1821712	FRAME SEAT TILT 30° VIII	
15	2	602186-99-0	SLIDE BEAR 121425 F	
16	1	302679-99-0	SHAFT FRONT HINGE SEAT	
17	1		SHAFT	
18	4	601225-99-0	CIRCLIP SGA 12	
19	1		HINGE	
20	2	600203-99-0	BOLT MC6S 8x 20 fzb	
21	2	600238-99-0	WASHER BRB 6.4X12 FZB	
22	2	600192-99-0	BOLT MC6S 6x12 fzb	
23	4	600880-99-0	BOLT MC6S 8X30 FZB	
23	4	601075-99-0	BOLT ESLOK 8x30 fzb	
24	2		LINKAGE ASSEMBLY	
25	1	1824255	POSITION SENSOR ICS 100mm	
26	1	612484-99-0	ACTU.LA28.1-100-24	
27	2	600229-99-0	LOCK NUT M10 fzb ISO 7040	
28	4	600241-99-0	WASH BRB 10.5x20x2 fzb	
29	2	302330-99-0	ACTUATOR BUSSING 30MM	
30	2	601231-99-0	BOLT MC6S 10x 55 fzb	
31	1	302081-00-0	LINEAR ACTUATOR 100 STD	
32	1	600212-99-0	SET SCREW SK6SS 4x4	
33	1	1824951	CLAMP SWITCH SOFTPOT C350	
34	1		TAPPING SCREW 3X 16 fzb REMFORM	
35	1	305841-99-0	BOLT KIT CTRL.POWER	
36	1	305186-40-0	CTRL PWR S.TILT 30°CII GN	

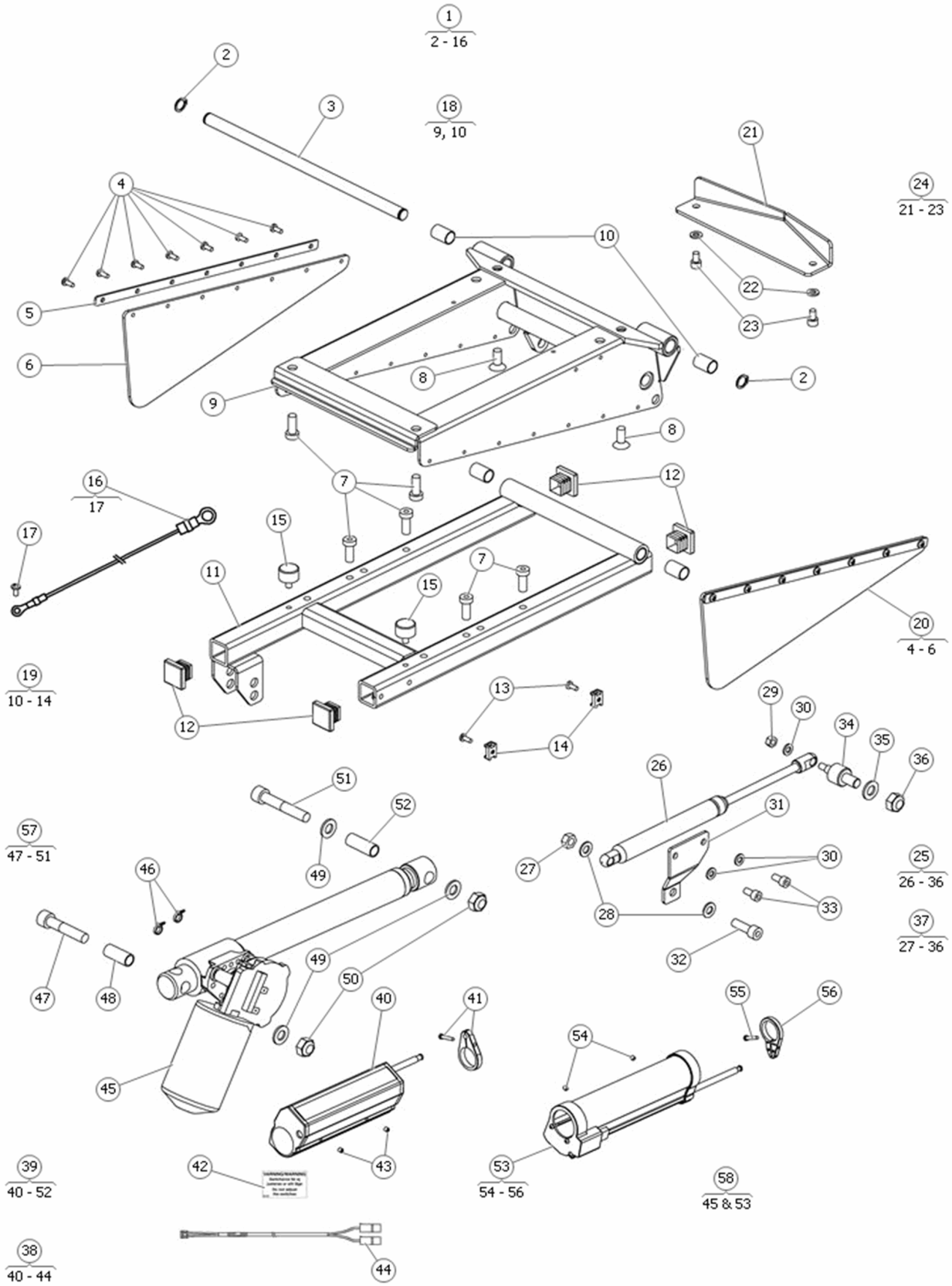
1
2 - 16
2
3
18
9, 10
21
24
21 - 23
4
10
22
5
23
6
8
2
9
8
16
17
7
12
17
15
7
11
15
20
4 - 6
19
10 - 14
13
29
30
12
14
34
35
36
26
51
52
31
57
47 - 51
27
30
25
26 - 36
46
49
28
33
37
27 - 36
32
47
48
49
50
40
41
55
56
54
45
39
40 - 52
42
43
53
54 - 56
58
45 & 53
38
40 - 44
44

Pos	Qty	Stock Code	Description	Remark
1	0	307250-40-0	SEAT TILT 45°	
2	2	601225-99-0	CIRCLIP SGA 12	
3	1		SHAFT	
4	7		SCREW, M4x10 Fe/Zn ISO 7045	
5	1		SQUEEZE GUARD BRACKET	
6	1		SQUEEZE GUARD	
7	6	601450-99-0	BOLT MLC6S 8x30 fzb	
8	2	600764-99-0	BOLT MF6S 8x20 fzb	
9	1		SEAT FRAME	
10	2	602187-99-0	SLIDE BEAR 121420 F	
11	1		FRAME LOWER	
12	4		PLASTIC PLUG	
13	2		SCREW, M4x10 Fe/Zn ISO 7045	
14	2		CABLE TIE HOLDER	
15	2	602639-99-0	RUBBER BLOCK MN60 M6x10	
16	1	306124-00-0	CABLE GALVANIC JUNCTION	
17	1	601436-99-0	BOLT MRX-TT-Z 4x8 fzb	
18	1		TILT FRAME UPPER	
19	1		TILT FRAME LOWER	
20	2		SQUEEZE GUARD, ASSEMBLY	
21	1		PLATE	
22	2	600238-99-0	WASHER BRB 6.4X12 FZB	
23	2	600888-99-0	BOLT MC6S 6x10 fzb	
24	0	1822312	SEATSUPP BRACKET CH2K	
25	1	307377-40-0	FALL DOWN PROTECTOR	
26	1	306884-00-0	STROKE COMPRESSOR HVII	
27	1	600228-99-0	LOCK NUT M8 FZB	
28	2	600239-99-0	WASHER BRB 8.4X16 FZB	
29	1	600227-99-0	LOCK NUT M6 FZB	
30	2	600238-99-0	WASHER BRB 6.4X12 FZB	
31	1		DAMPER GUARD BRACKET	
32	1	600499-99-0	BOLT MC6S 8x 25 fzb	
33	2	600192-99-0	BOLT MC6S 6x12 fzb	
34	1		SPACER FALL DOWN PROTECTOR	
35	1	600241-99-0	WASH BRB 10.5x20x2 fzb	
36	1	600229-99-0	LOCK NUT M10 fzb ISO 7040	
37	1		SCREW ASSEMBLY FALL DOWN PROTECTOR	
38	1		LIMIT SWITCH KIT- INCLUDED IN POSITION #39 (307267-00-0)	
38	1		LIMIT SWITCH KIT	
39	0	307267-00-0	POWERED ADJUSTMENT SEATTI	
40	0		LIMIT SWITCH	
41	0	601889-99-0	CLAMP LIMITSWITCH	
42	0		STICKER, WARNING	
43	0		SETSCREW, M4x4 DIN 916	NOT AVAILABLE
44	1	306293-00-0	CABLE ACTU CONTROL	
45	1		ACTU SEAT TILT 45°	INCLUDED IN POSITION #58
45	1		ACTU SEAT TILT 45° CII C400/C500 LA30 285+60	
46	2	600136-00-0	CABLE TIE SST1M 2.4x102	
47	1	601227-99-0	BOLT MC6S 10x 50 fzb	
48	1	302330-99-0	ACTUATOR BUSSING 30MM	
49	3	600241-99-0	WASH BRB 10.5x20x2 fzb	
50	2	600229-99-0	LOCK NUT M10 fzb ISO 7040	
51	1	601396-99-0	BOLT MC6S 10x 60 fzb	
52	1	302988-99-0	ACTU SLEEVE 34	
53	1		POSITION SENSOR	
54	1	600212-99-0	SET SCREW SK6SS 4x4	
55	1		TAPPING SCREW 3X 16 fzb REMFORM	
56	0	1824951	CLAMP SWITCH SOFTPOT C350	
57	1	307266-99-0	BOLT KIT CTRL PWR TILT45°	
58	1	1826123	ACTU INCL SOFTPOT TILT	
58	1	1826124	ACTU INCL SOFTPOT TILT	

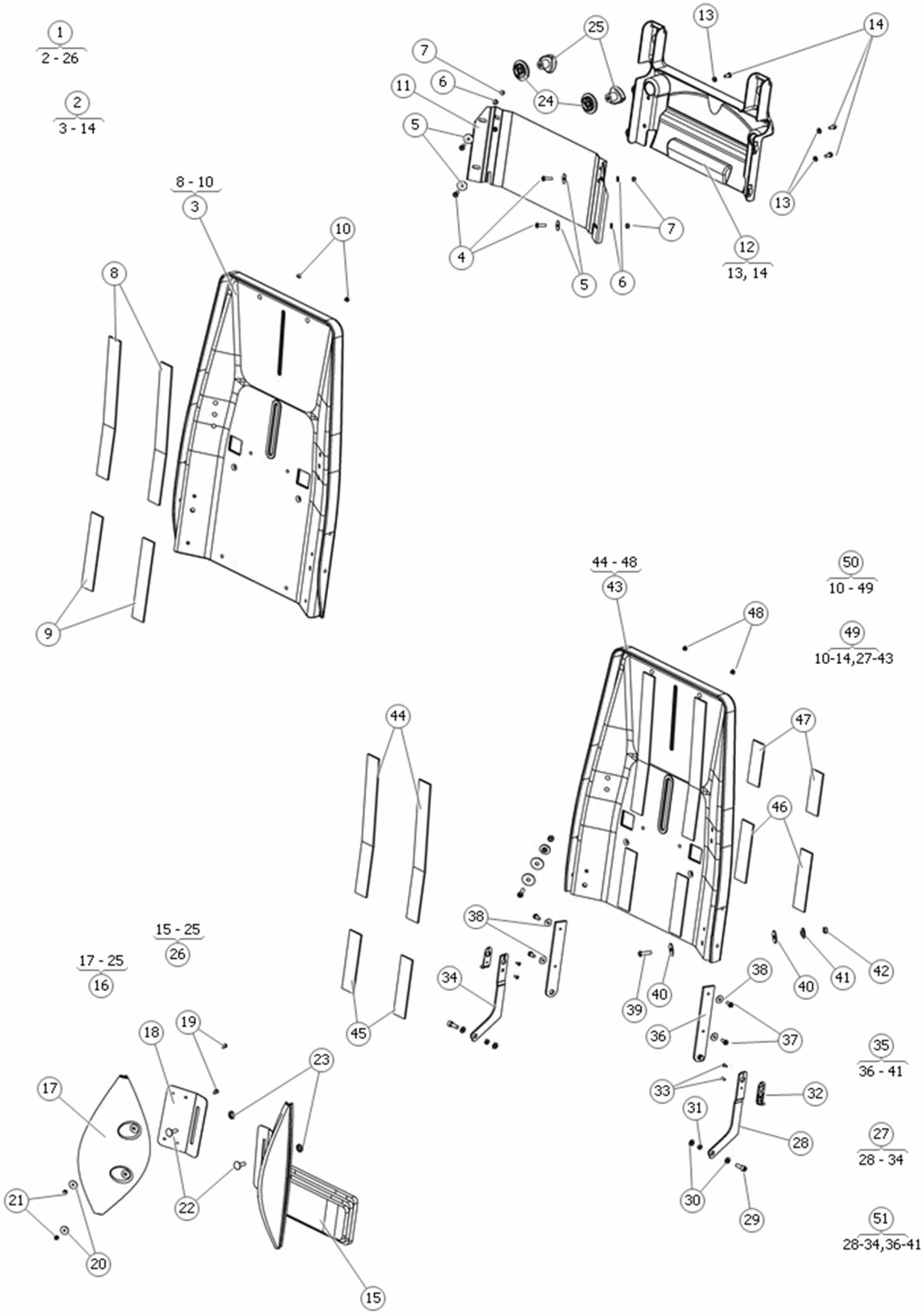
1
2 - 26
2
3 - 14
8 - 10
3
10
8
9
7
6
11
5
25
24
13
14
4
5
6
7
12
13, 14
13
44 - 48
43
48
50
10 - 49
49
10-14,27-43
44
47
46
45
38
34
39
40
36
38
37
40
41
42
35
36 - 41
33
32
31
28
27
28 - 34
30
29
51
28-34,36-41
15 - 25
26
17 - 25
16
18
19
23
17
22
21
20
15

Pos	Qty	Stock Code	Description	Remark
1	1	303892-00-0	BACKREST CORPUS +10 BLACK	Shell only
1	1	305300-00-90-0	BACKREST KIT C II	
1	1	305300-00-UD-0	BACKREST KIT C II	
1	1	305300-00-UD-0	BACKREST KIT C II	
1	1	305300-00-UD-0	BACKREST KIT C II	
1	1		BACKREST KIT 350x615	
1	1		BACKREST KIT 450x615	
1	1		BACKREST KIT 350x545	
1	1		BACKREST KIT 400x545	
1	1		BACKREST KIT 450x545	
2	1	303892-00-0	BACKREST CORPUS +10 BLACK	
2	1		BACKREST KIT 450x615	
2	1		BACKREST KIT 400x545	
2	1		BACKREST KIT 450x545	
2	1		BACKREST KIT 400x615	
3	1	303636-00-0	BACKREST CII	
3	1	303892-00-0	BACKREST CORPUS +10 BLACK	
3	1	305385-00-0	BACKR NARROW CII	
3	1	305545-00-0	BACKREST WIDE +50 CII	
3	1	305545-15-0	BACKR WI +50 CII	
3	1	310029-00-0	BACKR SHORT NARROW-50	
3	1	310032-00-0	BACKR SHORT CII	
3	1	310035-00-0	BACKR SHORT WI +50 CII	
4	4	601170-99-0	BOLT K6S 5x16 fzb	
5	4	600867-99-0	WASH NB 5x19x1 fzb	
6	4	600237-99-0	WASH BRB 5.3x10x 1 fzb	
7	4	600226-99-0	LOCK NUT M5 FZB	
8	2		VELCRO TAPE L=300	
9	2		VELCRO TAPE L=170	
10	2		PLASTIC PLUG Ø9x5,2 (Ø4,4)	
11	1	305199-40-0	BACKR PLATE SLIDE CII	
11	1	305251-40-0	BACKR PLATE CII	
11	1	305256-40-0	BACKR PLATE NARROW CII	
11	1	305360-40-0	BACKR PLATE WI CII	
11	1		BACKR PLATE SLIDE +50	
12	1	306363-00-0	COVER BACKREST CII	
13	4	600237-99-0	WASH BRB 5.3x10x 1 fzb	
14	4	601159-99-0	BOLT K6S 5X12 FZB	
15	1	306396-99-0	LUMBAR SUPPORT CII	
16	1	306400-00-0	LATERAL SUPPORT V2 wide=	
16	1	306424-00-0	LATERAL SUPPORT V2 wide=	
17	2		LAT SUPP PLASTIC HVII VII VIII CII	
17	1		LAT SUPP PLASTIC HVII VII VIII CII	
18	1		BRACKET LAT.SUPP V.2 CII HVII VII VIII	
18	1	306405-99-0	BRACKET WI.BACK LAT.SUPP	
19	4	601187-99-0	BOLT K6S 4x10 fzb	
20	4	601974-99-0	WASH BRB 4.3x16x 1 fzb	
21	4	600225-99-0	LOCK NUT M4 FZB	
22	2	601882-99-0	BOLT MVBF 6x20 H fzb	
23	1	601386-99-0	LOCK WASH S-LOCK 6x15.3	
24	2		WASH LAT SUPP V.2 CII HV V VIII	
25	2	306387-00-0	STAR HANDLE BACKR CII	for the new cover (electronics inside)
25	2	601943-99-0	STAR HANDLE VTR.40 B-M6	
26	1		ERGO KIT 400	
26	1		ERGO KIT 480	
27	1		INSTALL ASSEMBLY	
28	1		PLATE LEFT	
29	2	600743-99-0	BOLT MC6S 6x16 fzb	
30	4	600238-99-0	WASHER BRB 6.4X12 FZB	
31	2	304815-99-0	BUSHING Ý 9	
32	2	601375-99-0	QUICKLOCK SERIE 1500	
33	4	601972-99-0	DUMMY RIVET TAP/K 44 BS	
34	1		PLATE RIGHT	
35	1		INSTALL ASSEMBLY	
36	2		LOCK	
37	4	601159-99-0	BOLT K6S 5X12 FZB	
38	1	612857-99-0	WASHER 5,3x15x1 FZB ISO	
39	2	601370-99-0	BOLT K6S 6x20 fzb	
40	4	601939-99-0	WASH SRKB 7x25x1.5 fzb	
41	2	305268-99-0	SPACER LOWER BACKR SLIDE	
42	2	600227-99-0	LOCK NUT M6 FZB	
43	1	305191-00-0	BACKR SLIDE CII	SHELL ONLY 16" SLIDING BACK
43	1	305389-00-0	BACKR WI+50 SLIDE CII	SHELL ONLY 18" SLIDING BACK
43	1	311107-00-0	BACKR.EX.LOW STD SLIDE	Height = 410 mm, standard, sliding back.
43	1	311109-00-0	BACKR.EX.LOW WIDE CII	Height = 410 mm, wide, sliding back.
44	2		VELCRO TAPE L=300	
45	2		VELCRO TAPE L=125	
46	2		VELCRO TAPE L=125	
47	2		VELCRO TAPE L=90	
48	2		PLASTIC PLUG Ø9x5,2 (Ø4,4)	
49	1		BACKREST KIT 400x545	
49	1		BACKREST KIT 450x545	
50	1	305200-00-80-0	BACKR KIT SLIDE CII	Incl. cushion

Pos	Qty	Stock Code	Description	Remark
50	1	305200-00-90-0	BACKR KIT SLIDE	Incl. cushion
50	1	305200-00-UD-0	BACKREST KIT SLIDE	
50	1	305252-00-80-0	BACKR KIT WI +50 SLIDE	Incl. cushion
50	1	305252-00-90-0	BACKR KIT WI +50 SLIDE	Incl. cushion
50	1	305252-00-UD-0	BACKRESTKIT WIDE SLIDE	
51	1	1828886	INSTALL KIT BACKR SLIDE C	

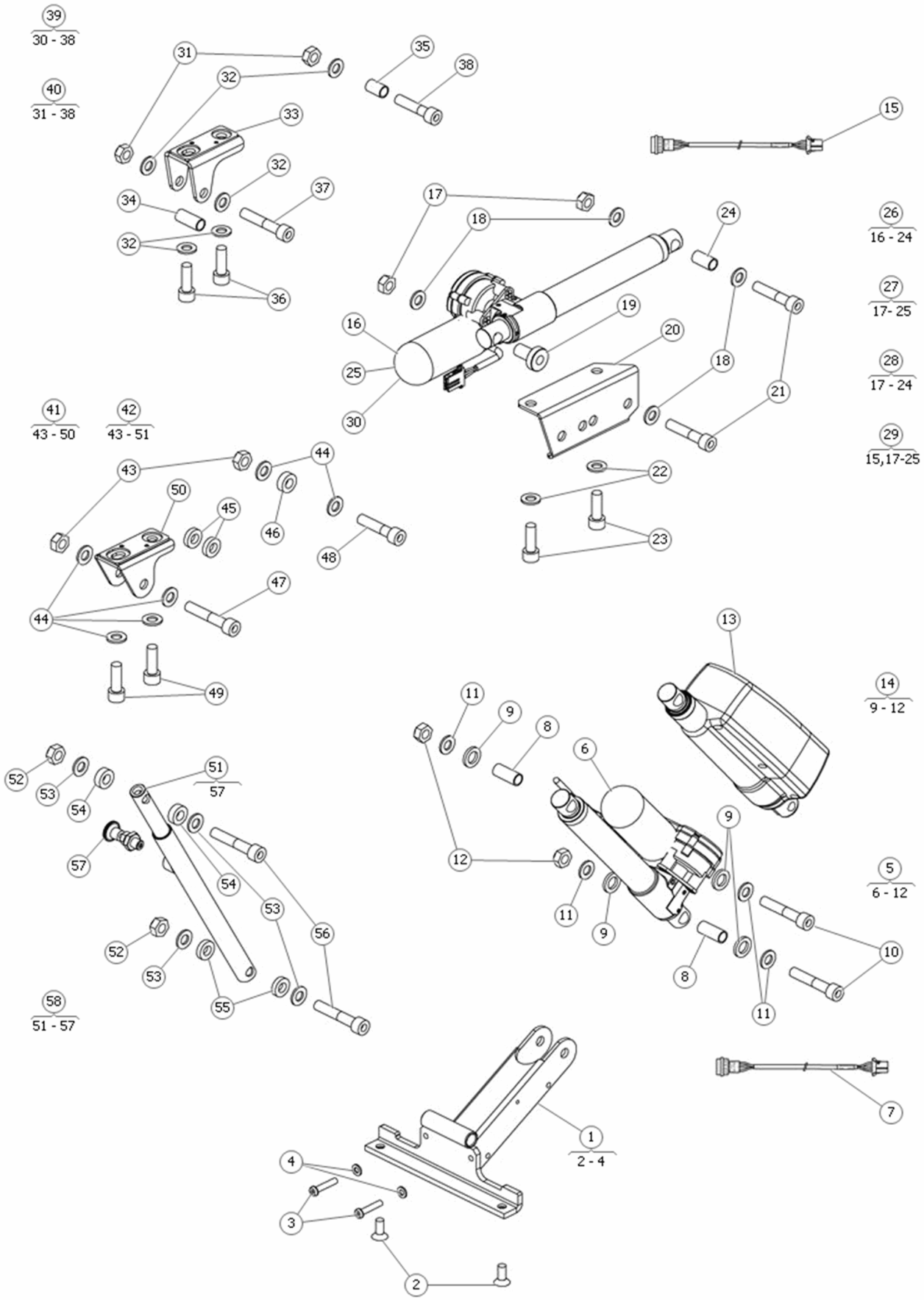
39
30 - 38
40
31 - 38
41
43 - 50
42
43 - 51
26
16 - 24
27
17- 25
28
17 - 24
29
15,17-25
14
9 - 12
5
6 - 12
58
51 - 57
1
2 - 4

Pos	Qty	Stock Code	Description	Remark
1	1	308386-28-0	ACTU BRACK MID.MOUNT CTRL	
2	2	600764-99-0	BOLT MF6S 8x20 fzb	
3	1	601372-99-0	BOLT K6S 6x45 fzb	
3	1	602035-99-0	BOLT K6S 6x30 fzb	
4	2	600238-99-0	WASHER BRB 6.4X12 FZB	
5	1	1825040	ACTU BACK 135° INCL SCREW	
6	1	1824122	ACTU ICS BACKR 135° LOW-	
7	1	1821533	BUS CABLE EXT 0,5 M	
8	2	302330-99-0	ACTUATOR BUSSING 30MM	
9	4	1825286	WASHER 13,5x22x3 PE BLACK	
10	2	601231-99-0	BOLT MC6S 10x 55 fzb	
11	4	601363-99-0	WASH BRB 10.5x18x2 fzb	
12	2	600229-99-0	LOCK NUT M10 fzb ISO 7040	
13	1	307071-00-0	ACTU LA28.25S-100-24	
14	1		MOUNT KIT POWER REGL	
15	1	1821827	CABLE EXTENSION ICS 700MM	
16	1	1824121	ACTU ICS BACKR CII C400/	
17	2	600229-99-0	LOCK NUT M10 fzb ISO 7040	
18	4	600241-99-0	WASH BRB 10.5x20x2 fzb	
19	1	1827729	BUSH ACTUATOR MAN BACKR	
19	1		BUSHING	
20	1		BRACKET ACTUATOR	
21	2	601227-99-0	BOLT MC6S 10x 50 fzb	
22	2	600241-99-0	WASH BRB 10.5x20x2 fzb	
23	2	600205-99-0	BOLT MC6S 10x 30 fzb	
24	1	1825219	SPACER ACTU L=24 Ø13x1.25	
25	1	1824179	ACTU ICS BACKR 180° R-NET	
26	1		ACTUATOR BACKREST INCL ASSEMBLY KIT	
27	1	1824787	CTRL PWR BACKREST 180° R-	
28	1	1824180	BOLT KIT ACTU LEGREST +	
29	1	1824787	CTRL PWR BACKREST 180° R-	
30	1	304263-00-0	ACTUATOR STANDING SEAT	
31	2	600229-99-0	LOCK NUT M10 fzb ISO 7040	
32	5	600241-99-0	WASH BRB 10.5x20x2 fzb	
33	1		BRACKET ACTU	
34	1	302330-99-0	ACTUATOR BUSSING 30MM	
35	1	301592-99-0	ACTU SLEEVE 20	
36	2	600205-99-0	BOLT MC6S 10x 30 fzb	
37	1	601231-99-0	BOLT MC6S 10x 55 fzb	
38	1	600277-99-0	BOLT MC6S 10x 45 fzb	
39	1	305270-28-0	CTRL PWR BACK CII 1P/1P	
40	1	305839-28-0	BOLT KIT CTRL PWR BACK	
41	1	312905-28-0	INSTALL KIT CTRL MAN LEGR	
42	1	1821543	CTRL MAN BACK C4-500	
43	2	600229-99-0	LOCK NUT M10 fzb ISO 7040	
44	6	600241-99-0	WASH BRB 10.5x20x2 fzb	
45	2		SHIM WASHER 18x25x0,2 DIN 988	
46	1		SPACER NYLON 10.5x20x7 HDPE	
47	1	601231-99-0	BOLT MC6S 10x 55 fzb	
48	1	600277-99-0	BOLT MC6S 10x 45 fzb	
49	2	600205-99-0	BOLT MC6S 10x 30 fzb	
50	1		BRACKET ACTU	
51	1	312853-40-0	TUBE ADJUST MAN CTRL LEG-	
52	2	600229-99-0	LOCK NUT M10 fzb ISO 7040	
53	4	600241-99-0	WASH BRB 10.5x20x2 fzb	
54	1		SPACER NYLON 10.5x20x7 HDPE	
55	1		SPACER NYLON 10.5x20x5 HDPE BLACK	
56	2	601231-99-0	BOLT MC6S 10x 55 fzb	
57	1	602328-00-0	ADJ BOLT GN617 AK5	
58	1	312332-40-0	CTRL MAN BACK CHHD HD	

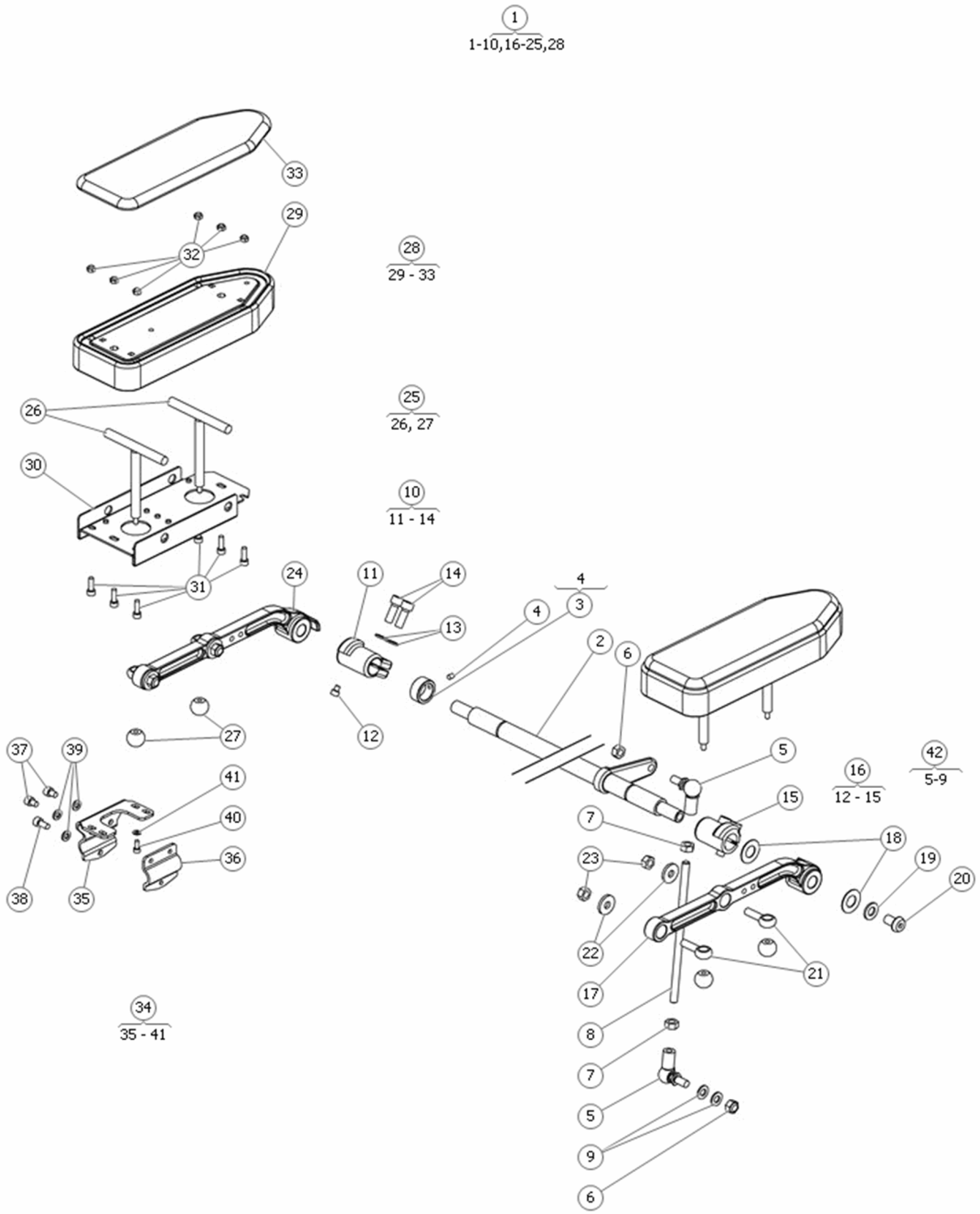
1
1-10,16-25,28
33
29
32
28
29 - 33
26
25
26, 27
30
10
11 - 14
31
24
11
14
13
4
3
4
2
6
12
27
37
39
41
40
36
38
35
5
16
12 - 15
42
5-9
15
7
18
23
19
20
22
21
17
34
35 - 41
8
7
5
9
6

Pos	Qty	Stock Code	Description	Remark
1	1	305267-28-0	ARMREST KIT	
1	1	305267-28-0	ARMREST KIT	
1	1	305267-38-0	ARMREST RECLINING 35/40CM	
1	1	305618-28-0	ARMREST KIT PLG +50 CII	
2	1	1826388	SHAFT ARMREST PLG +100	
2	1	302722-99-0	ARMSUPPORT ROD 40CM	
2	1	304968-99-0	ROD PARALLEL ARMSUPPORT	
3	1	301658-99-0	STOP COLLAR ARMREST C CII	
4	1	600546-99-0	SET SCREW SK6SS 5x6	
5	2	601415-99-0	ANGLE LINK AS M 8 fzb	
6	2	600228-99-0	LOCK NUT M8 FZB	
7	2	600233-99-0	NUT M6M 8 BHB FZB	
8	1	305458-99-0	BOLT PS 8x175 fzb	
9	2	600239-99-0	WASHER BRB 8.4X16 FZB	
10	1	1822340	CLAMP RING ARMR RIGHT	
11	1		CLAMP RIGHT	
12	2	601126-99-0	BOLT MC6S 5x 6 fzb	
13	4	601427-99-0	WASH BRB 8.4x15x1.6 fzb	
14	4	601127-99-0	BOLT MC6S 8x 22 fzb	
15	1		CLAMP LEFT	
16	1	1822339	CLAMP RING ARMR LEFT	
17	1	1820250	ARMR BRACK PLG V.2 LEFT	
18	4	600700-99-0	CUP SPRING	
19	2	600241-99-0	WASH BRB 10.5x20x2 fzb	
20	2	600701-99-0	BOLT K6S 10X16 FZB	
21	4	303003-99-0	LINK BOLT PARALLEL ARM-	
22	4	305390-99-0	WASH 8.5*23*3 FZB	
23	4	600228-99-0	LOCK NUT M8 FZB	
24	1	1820249	ARMR BRACK PLG V.2 RIGHT	
25	1	1824007	ENHANCEMENT KIT ARMREST	
25	1	306025-99-0	ARM SUPPORT HIGH ADAPTION	
26	1	1824007	ENHANCEMENT KIT ARMREST	
26	1		BRACKET LONG	
27	4	601395-00-0	HANDLE KNOB 20 M5	
28	2	1822782	ARMREST 250 FABRIC	FABRIC
28	2	1822783	ARMREST 300 FABRIC	FABRIC
28	2	1822784	ARMREST 350 FABRIC	FABRIC
28	2	1822785	ARMREST 400 FABRIC	FABRIC
28	2	1822786	ARMREST 250	SKAI
28	2	1822787	ARMREST 300	SKAI
28	2	1822788	ARMREST 350	SKAI
28	2	1822789	ARMREST 400	SKAI
29	1		ARMREST 400	
29	1		ARMREST 350	
29	1		ARMREST 300	
29	1		ARMREST 250	
30	1	1821918	ARMR GUIDE PLATE 400 PLG	
30	1	1822068	ARMR GUIDE PLATE 350 PLG	
30	1	1822153	ARMR GUIDE PLATE	
31	6	601165-99-0	BOLT MC6S 5x16 fzb	
32	6	600226-99-0	LOCK NUT M5 FZB	
33	1	1825297	PAD UPHOLST 250	FABRIC
33	1	1825298	PAD UPHOLST 300	FABRIC
33	1	1825299	PAD UPHOLST 350	FABRIC
33	1	1825300	PAD UPHOLST 400	FABRIC
33	1	1825301	PAD SKIN 250	SKAI
33	1	1825302	PAD SKIN 300	SKAI
33	1	1825303	PAD SKIN 350	SKAI
33	1	1825304	PAD SKIN 400	SKAI
34	1	302719-99-0	PANEL HOLD BRACK	
35	1		ANGEL	
36	1		HOLDER	
37	2	601359-99-0	BOLT MC6S 6x 8 fzb	
38	1	600192-99-0	BOLT MC6S 6x12 fzb	
39	3	600238-99-0	WASHER BRB 6.4X12 FZB	
40	1	600183-99-0	BOLT MC6S 4x10 fzb	
41	1	601296-99-0	WASHER BRB 4.3x 9 fzb	
42	1	302720-99-0	TIE BAR ARMR SHAFT	

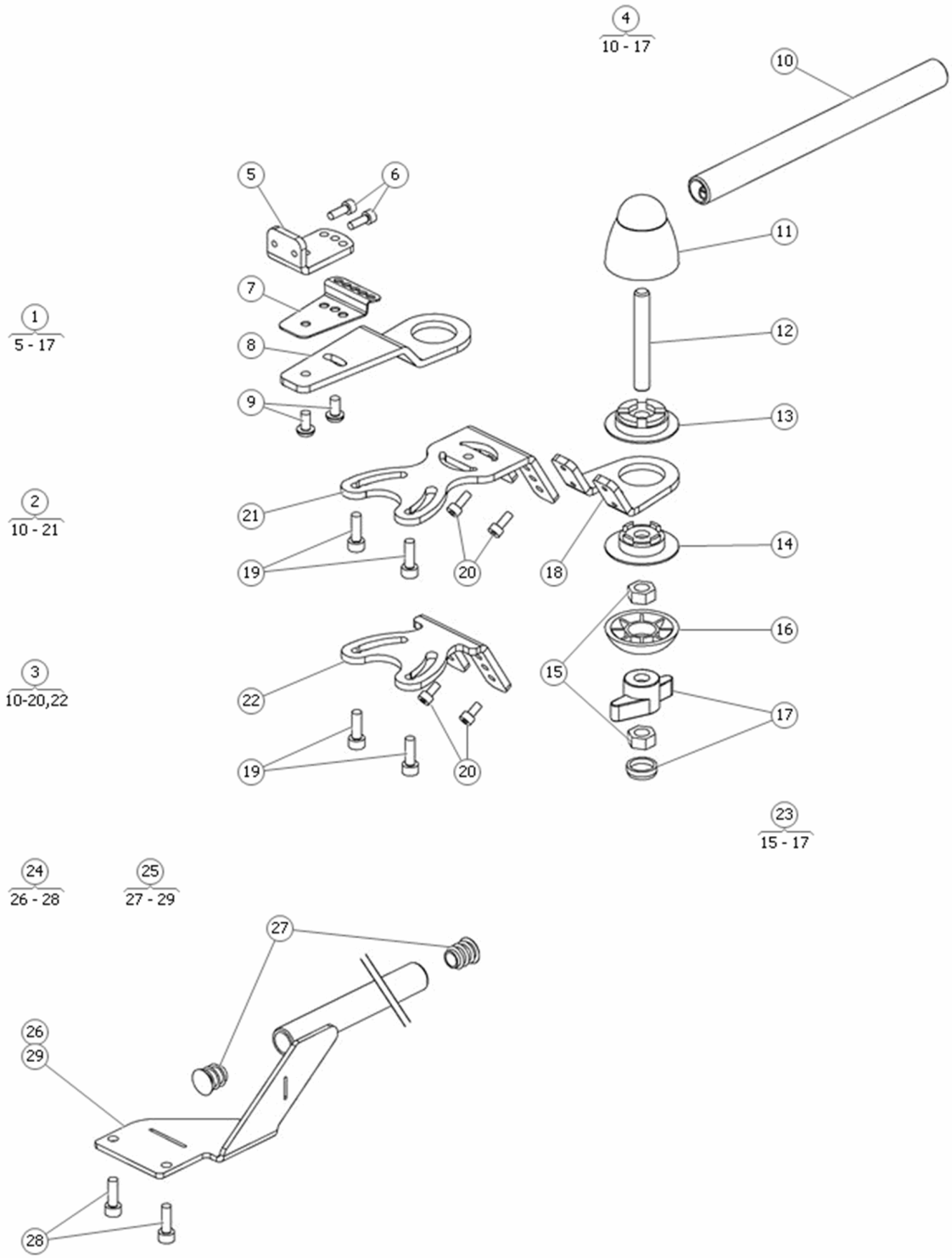
4
10 - 17
10
5
6
11
7
1
5 - 17
8
12
9
13
2
10 - 21
21
19
20
18
14
16
3
10-20,22
15
22
17
19
20
23
15 - 17
24
26 - 28
25
27 - 29
27
26
29
28

Pos	Qty	Stock Code	Description	Remark
1	1	308985-99-0	PANEL HOLD 335 HI P+	
1	1	310045-99-0	PANEL HOLD 435 HI P+	
2	1	1822455	PANELH. 335 ADJUSTABLE	
2	1	1822456	PANELH. 435 ADJUSTABLE	
3	1	1824242	PANEL HOLDER ADJ. VR2 R-N	
4	1		HINGE L=435	
4	1		HINGE L=335	
5	1		BRACKET	
6	1	600184-99-0	BOLT MC6S 4x12 fzb	
7	1	1825189	PLATE PANELHOLDER P+, PG8	
8	1		PLATE	
9	1	601353-99-0	BOLT K6S 5x10 fzb	
10	1		TUBE L=335	
10	1		TUBE L=435	
11	1		HINGE	
12	1		SCREW, ISO 4029 M8x60 A2	
13	1		LOCK WASHER	
14	1		LOCK WASHER	
15	1	600228-99-0	LOCK NUT M8 FZB	
16	1		WASHER CONCAVE	
17	1		LOCK HANDLE	
18	1		PLATE	
19	1	601165-99-0	BOLT MC6S 5x16 fzb	
20	1	600183-99-0	BOLT MC6S 4x10 fzb	
21	1		PANEL HOLDER	
22	1		PANEL HOLDER V2	
23	1	1825556	ADJUSTMENT KNOB KIT	
24	1	1820439	PANEL HOLD VSI RIGHT	
25	1	1820440	PANEL HOLD VSI LEFT	
26	1		BRACKET, RIGHT	
27	1		PLASTIC PLUG	
28	1	601165-99-0	BOLT MC6S 5x16 fzb	
29	1		BRACKET, LEFT	

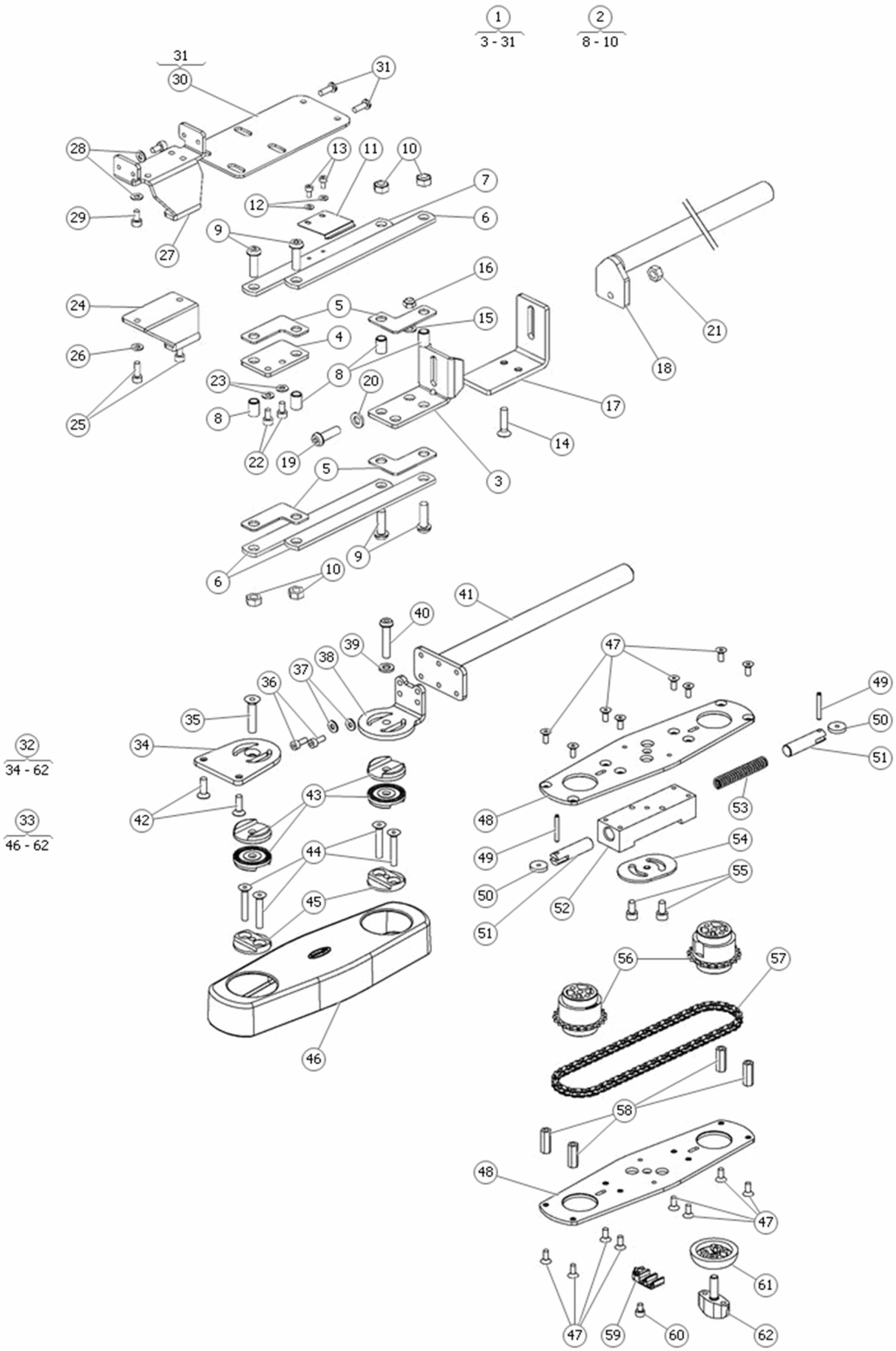
1
3 - 31
2
8 - 10
31
30
31
28
13
11
10
7
12
6
29
9
27
16
24
5
15
4
21
26
8
20
18
23
17
25
8
14
22
19
3
5
9
6
10
41
40
39
47
38
37
36
49
35
50
32
34 - 62
34
51
43
53
42
48
33
46 - 62
49
54
44
55
50
52
45
51
56
57
46
58
48
47
61
47
59
60
62

Pos	Qty	Stock Code	Description	Remark
1	1	1821782	PANEL HOLD PLG LEFT	Left
1	1	1826772	PANEL HOLDER PLG RIGHT C	Right
2	2	1822319	REPAIR KIT PIVOT, RETRACT	
3	1		PLATE	
4	1		PLATE	
5	4		PLATE	
6	3		PLATE HINGE	
7	1		PLATE HINGE	
8	2		SPACER L=12 Ø8h9/Ø6+0.2/-0	
9	2	601370-99-0	BOLT K6S 6x20 fzb	
10	2	600227-99-0	LOCK NUT M6 FZB	
11	1	306814-99-0	HOLD DOWN SPRING P.HOLDER	
12	2	601202-99-0	WASH BRB 3.2x 7 fzb	
13	1	601346-99-0	BOLT MC6S 3x 6 fzb	
14	1		SCREW ISO 10642 M5x22 Fe/Zn	
15	1	600237-99-0	WASH BRB 5.3x10x 1 fzb	
16	1	600226-99-0	LOCK NUT M5 FZB	
17	1		PLATE REINFORCEMENT	
18	1		PANELHOLDER	
19	1	601370-99-0	BOLT K6S 6x20 fzb	
20	1	600238-99-0	WASHER BRB 6.4X12 FZB	
21	1	600227-99-0	LOCK NUT M6 FZB	
22	2	600182-99-0	BOLT MC6S 4x 8 fzb	
23	2	601296-99-0	WASHER BRB 4.3x 9 fzb	
24	1		PLATE	
25	2	600184-99-0	BOLT MC6S 4x12 fzb	
26	2	601296-99-0	WASHER BRB 4.3x 9 fzb	
27	1	309958-99-0	BRACK PANEL/SW.BOX P+	
28	2	601296-99-0	WASHER BRB 4.3x 9 fzb	
29	2	600182-99-0	BOLT MC6S 4x 8 fzb	
30	1		BRACKET EXTRA PANEL	
31	2	601102-99-0	BOLT K6S 4x12 fzb	
32	1	1824295	PANEL HOLDER PLG VR2 R-NE	
33	1		HINGE	
34	1		PLATE	
35	1	600729-99-0	BOLT MF6S 6x30 fzb	
36	2	600183-99-0	BOLT MC6S 4x10 fzb	
37	1	600741-99-0	WASH BRB 4.3x10x 1 fzb	
38	1		PLATE	
39	1	600238-99-0	WASHER BRB 6.4X12 FZB	
40	1	601372-99-0	BOLT K6S 6x45 fzb	
40	1	602035-99-0	BOLT K6S 6x30 fzb	
41	1		PANELHOLDER	
42	1	601189-99-0	BOLT MF6S 5x16 fzb	
43	4	1823502	ADJUSTMENT DISC (TEETH)	
44	4	601424-99-0	BOLT MF6S 5x30 fzb	
45	2		PLATE	
46	1		COVER	
47	1	600208-99-0	BOLT MF6S 4x10 fzb	
48	2		PLATE	
49	2		SPRING PIN, 3x24 St ISO 8750	
50	2		WHEEL	
51	2		SHAFT	
52	1		BODY	
53	1		SPRING	
54	1		PLATE	
55	2	600189-99-0	BOLT MC6S 5x10 fzb	
56	2		CHAIN SPROCK	
57	1		ROLLER CHAIN	
58	4		HEXAGON SPACER, M4 7x20 Fe/Zn	
59	1	1827135	CLAMP 2 CABLES	
60	1	600832-99-0	BOLT MC6S 4x 6 fzb	
61	1		WASHER	
62	1	602360-00-0	STARHANDLE CT.47630P	

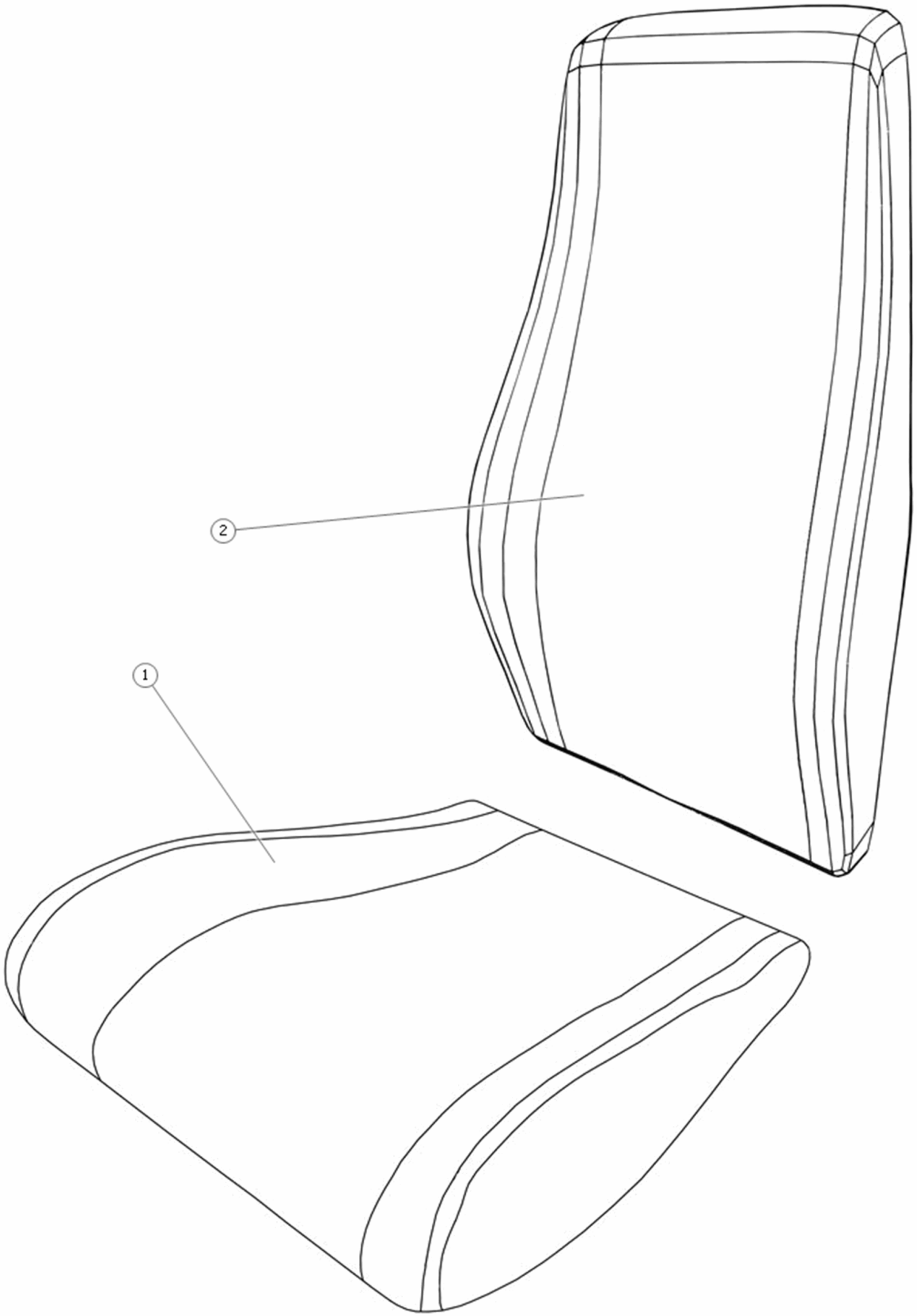
2
1

Pos	Qty	Stock Code	Description	Remark
1	1	306431-99-60-0	SEAT CUSH ERGO 450x500	
1	1	306431-99-80-0	SEAT CUSHION ERGO CORPUS	
1	1	306431-99-90-0	SEATCUSHION ERGO 42.5*	
1	1	306470-99-20-0	SEATCUSHION ERGO 47.5*	
1	1	306470-99-60-0	SEAT CUSH ERGO 500x500	
1	1	306470-99-80-0	SEAT CUSH ERGO 500x500	
1	1	306470-99-90-0	SEATCUSHION ERGO 47.5*	
1	1	306471-99-60-0	SEAT CUSH ERGO 450x560	
1	1	306471-99-80-0	SEAT CUSH ERGO 450x560	
1	1	306471-99-90-0	SEATCUSHION ERGO 42.5*	
1	1	306472-99-20-0	SEATCUSHION ERGO 4735*	
1	1	306472-99-60-0	SEAT CUSH ERGO 500x560	
1	1	306472-99-80-0	SEAT CUSH ERGO 500x560	
1	1	306735-99-20-0	SEATCUSHION ERGO 42.5*	
1	1	306735-99-60-0	SEAT CUSHION ERGO 450x420	
1	1	306735-99-80-0	SEAT CUSH ERGO 450x420	
1	1	306735-99-90-0	SEATCUSHION ERGO 42.5*	
1	1	310096-99-60-0	SEAT CUSH COMFORT STD	
1	1	310096-99-80-0	SEATCUSH COMFORT STD	
1	1	311152-99-60-0	SEAT CUSHION COMFORT 450x	
1	1	311153-99-60-0	SEAT CUSHION COMFORT 500x	
1	1	311154-99-60-0	SEAT CUSHION COMFORT 500x	
1	1	311156-99-60-0	SEAT CUSHION ERGO 420x370	
1	1	311393-99-60-0	SEAT CUSHION COMFORT 450x	
1	1	311393-99-80-0	SEAT CUSH COMFORT 450x530	
1	1	311394-99-60-0	SEAT CUSHION COMFORT 500x	
1	1	311394-99-80-0	SEAT CUSH COMFORT 500x530	
1	1	311398-99-60-0	SEAT CUSHION 450x530 FABR	
1	1	311398-99-90-0	SEAT CUSH ERGO 450x530	
1	1	311401-99-60-0	SEAT CUSH ERGO 500x530	
1	1	311401-99-90-0	SEAT CUSH ERGO 500x530	
1	1	311403-99-60-0	SEAT CUSHION COMFORT 450x	
1	1	311403-99-80-0	SEAT CUSH COMFORT 450x450	
1	1	311494-99-60-0	SEAT CUSHION COMFORT 450X	
1	1	311494-99-80-0	SEAT CUSH COMFORT 450x420	
2	1	1824854	BACKR CUSH 370x470 MESH	
2	1	1824856	BACKR CUSH 420x470 MESH	
2	1	1824857	BACKR CUSH 470x470 MESH	
2	1	306430-99-20-0	BACKREST CUSHION ERGO 40/	
2	1	306430-99-60-0	BACKR CUSH ERGO 420x600	
2	1	306430-99-80-0	BACKR CUSH ERGO 420x600	
2	1	306430-99-80-0	BACKR CUSH ERGO 420x600	
2	1	306430-99-90-0	BACKRESTCUSHION ERGO 60/	
2	1	306473-99-20-0	BACKREST CUSHION ERGO 45/	
2	1	306473-99-60-0	BACKR CUSH ERGO 470x600	
2	1	306473-99-80-0	BACKR CUSH ERGO 470x600	
2	1	306473-99-80-0	BACKR CUSH ERGO 470x600	
2	1	306473-99-90-0	BACKRESTCUSHION ERGO 60/	
2	1	306475-99-60-0	BACKR CUSH 370x600 CII	
2	1	306475-99-80-0	BACKR CUSH ERGO 370x600	
2	1	306475-99-90-0	BACKRESTCUSHION ERGO 60/	
2	1	307506-99-60-0	BACKR CUSH ERGO 370x530	
2	1	307507-99-60-0	BACKR CUSH ERGO 420x530	
2	1	307508-99-60-0	BACKR CUSH ERGO 470x530	
2	1		BACKR 14X21	
2	1	311143-99-90-0	BACR.CUSH.ERGO EX.LOW	
2	1		BACKR 16X21	
2	1	311144-99-90-0	BACKR.CUSH.ERGO EX.LOW	
2	1		BACKR 18X21	
2	1	311145-99-90-0	BACKR.CUSH.ERGO EX.LOW	

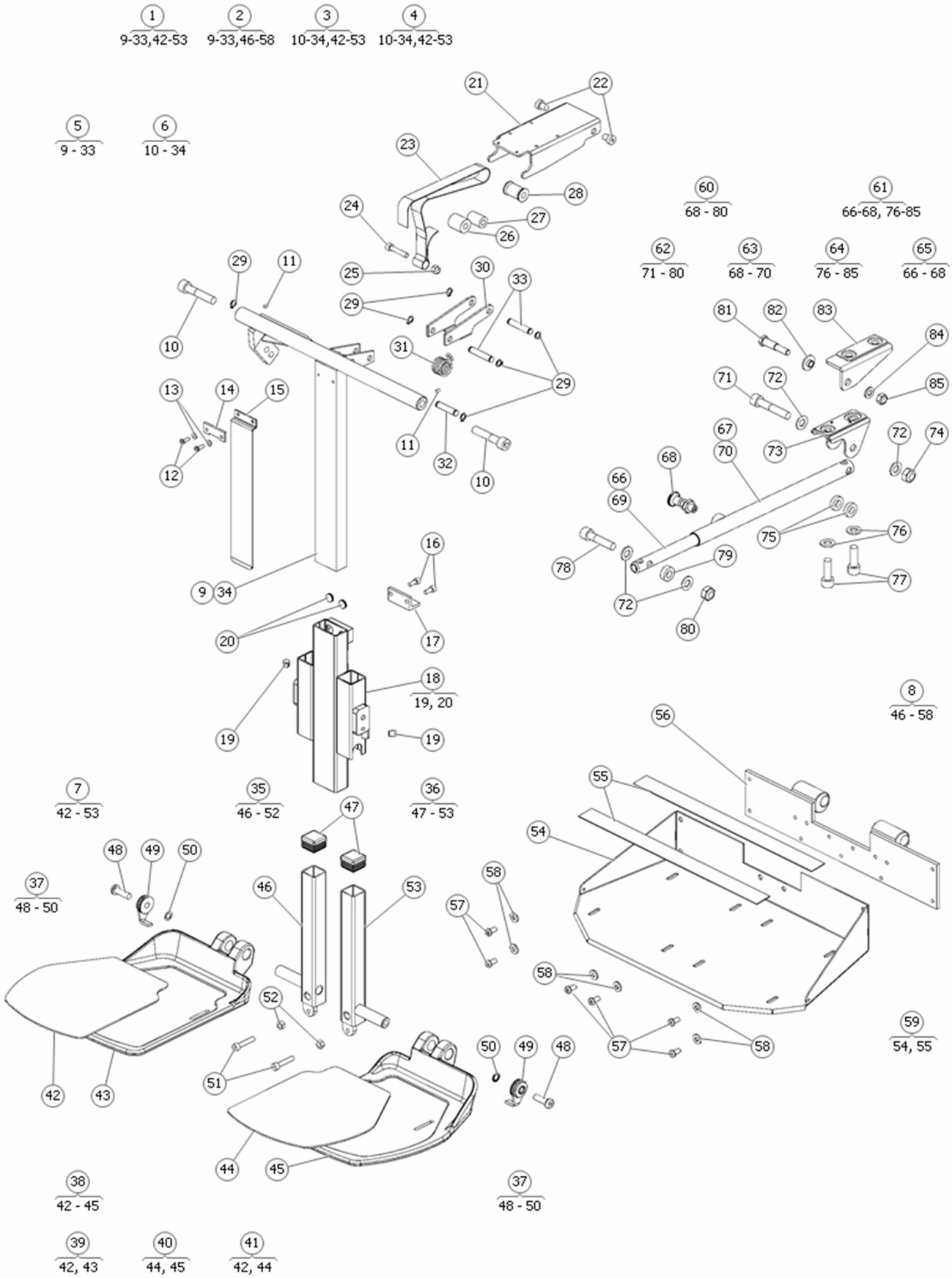
1 9-33,42-53
2 9-33,46-58
3 10-34,42-53
4 10-34,42-53
5 9 - 33
6 10 - 34
60 68 - 80
61 66-68, 76-85
62 71 - 80
63 68 - 70
64 76 - 85
65 66 - 68
18 19, 20
8 46 - 58
7 42 - 53
35 46 - 52
36 47 - 53
37 48 - 50
59 54, 55
38 42 - 45
37 48 - 50
39 42, 43
40 44, 45
41 42, 44

Pos	Qty	Stock Code	Description	Remark
1	1	312850-28-0	LEGREST 2-P FOTPL WIDE	
2	1	304117-28-0	LEGREST 1 PIECE	
3	1	310281-28-0	LEGREST 2-P FOTPL LOW	
4	1	310230-28-0	LEGREST 1-P FOOTPL.LOW	
5	1		LEGREST	
6	1		LEGREST	
7	1		FOOTPLATE	
8	1		FOOTPLATE	
9	1	305231-99-0	INNER SECTION UP. HINGE	
10	1	601227-99-0	BOLT MC6S 10x 50 fzb	
11	1	600556-99-0	SET SCREW SK6SS 4x5	
12	1	601102-99-0	BOLT K6S 4x12 fzb	
13	1	601296-99-0	WASHER BRB 4.3x 9 fzb	
14	1	1829669	WEB BELT HOLDER	
15	1	305183-28-0	PROTECT PLATE LEGREST CII	
15	1	305183-28-0	PROTECT PLATE LEGREST CII	
16	1	600169-99-0	BOLT MC6S 5x12 fzb	
17	1	305237-99-0	WEB BRACK LEGREST CII GN	
18	1	305240-28-0	OUT.SECT FOOTPL BRACK CII	
18	1	305240-38-0	OUTER SECTION FTPLATE	
19	1	600737-99-0	SET SCREW SK6SS 8x10	
20	1	305162-99-0	SLIDE PLATE Ý 12x2.50	
21	1	305234-99-0	SLIDE BAR FOOT/LEGREST	
22	1	601703-99-0	BOLT MLC6S 8x10 fzb	
23	1	305245-00-0	WEB BELT CALF REST CII	
24	1	600196-99-0	BOLT MC6S 6x30 fzb	
25	1	1821261	NUT	
26	1	305224-99-0	ROLL 23mm CII	
27	1	1821258	ROLLER Ø 16 M.M.	
28	1	1821259	ROLLER Ø 17 M.M.	
29	1	600503-99-0	CIRCLIP SGA 8	
30	1	1821089	ROLL BRACK CII	
31	1	1821260	SPRING WEB BELT RS	
32	1	305223-99-0	SHAFT 36mm ROLL	
33	1	305221-99-0	SHAFT 43mm ROLL	
34	1	310017-99-0	INNER SECT.HINGE LEG.LWR	DIFFERS FROM PART SHOWN- 310017-99-0 ONL…
35	1	308343-99-1	BRACK FOOTPL LEGREST CII	
36	1	308343-99-2	BRACK FOOTPL LEGREST CII	
37	1	308371-99-0	FRICTIONS GUIDE FOOTPL	
38	1	1821776	FOOTPLATES PAIR WIDE	
39	1	1821244	FOOTPLATE WIDE RIGHT	
40	1	1821243	FOOTPLATE WIDE LEFT	
41	1	1820716	SLIP PROTECT SET	
42	1		RUBBER PROTECT	
43	1		FOOTPLATE	
44	1		RUBBER PROTECT	
45	1		FOOTPLATE	
46	1		BRACKET	
47	1	601236-00-0	PLAST PLUG 56-25-25	
48	1	602165-99-0	BOLT K6S 8x 25 FZB	
49	1		FRICTIONSBRAKE	
50	1	602127-99-0	WASH SCHNORR 8.4x13x0.8	
51	1	600196-99-0	BOLT MC6S 6x30 fzb	
52	1	600232-99-0	NUT M6M 6 fzb	
53	1		BRACKET	
54	1		FOOTPLATE	
55	680	603068-00-0	NON-SLIP TAPE W=25 ROLL	
56	1	303788-99-0	HOLDER ONE PIECE FOOT-	
57	1	601422-99-0	BOLT K6S 6x12 fzb	
58	1	601364-99-0	WASH BRB 6.4x14x1.5 fzb	
59	1	305592-28-0	FOOTPL 1PC CII CH8 CH2k	
60	1	1821542	CTRL MAN LEG C4-500	
61	1	1820537	CTRL MAN LEG CII C300	
62	1	312905-28-0	INSTALL KIT CTRL MAN LEGR	
63	1		TUBE	
64	1	313703-28-0	INST.ASSY MAN.CTRL C300/	
65	1	312853-40-0	TUBE ADJUST MAN CTRL LEG-	
66	1		TUBE	
67	1		OUTER TUBE	
68	1	602328-00-0	ADJ BOLT GN617 AK5	
69	1		INNER TUBE	
70	1		OUTER TUBE	
71	1	601231-99-0	BOLT MC6S 10x 55 fzb	
72	1	600241-99-0	WASH BRB 10.5x20x2 fzb	
73	1		BRACKET	
74	1	600229-99-0	LOCK NUT M10 fzb ISO 7040	
75	1		SPACER NYLON 10.5x20x5 HDPE BLACK	
76	1	600241-99-0	WASH BRB 10.5x20x2 fzb	
77	1	600205-99-0	BOLT MC6S 10x 30 fzb	
78	1	600277-99-0	BOLT MC6S 10x 45 fzb	
79	1		SPACER NYLON 10.5x20x7 HDPE	
80	1	600229-99-0	LOCK NUT M10 fzb ISO 7040	
81	1		LINK BOLT	

Pos	Qty	Stock Code	Description	Remark
82	1		BUSHING	
83	1		BRACKET	
84	1	600239-99-0	WASHER BRB 8.4X16 FZB	
85	1	600228-99-0	LOCK NUT M8 FZB	

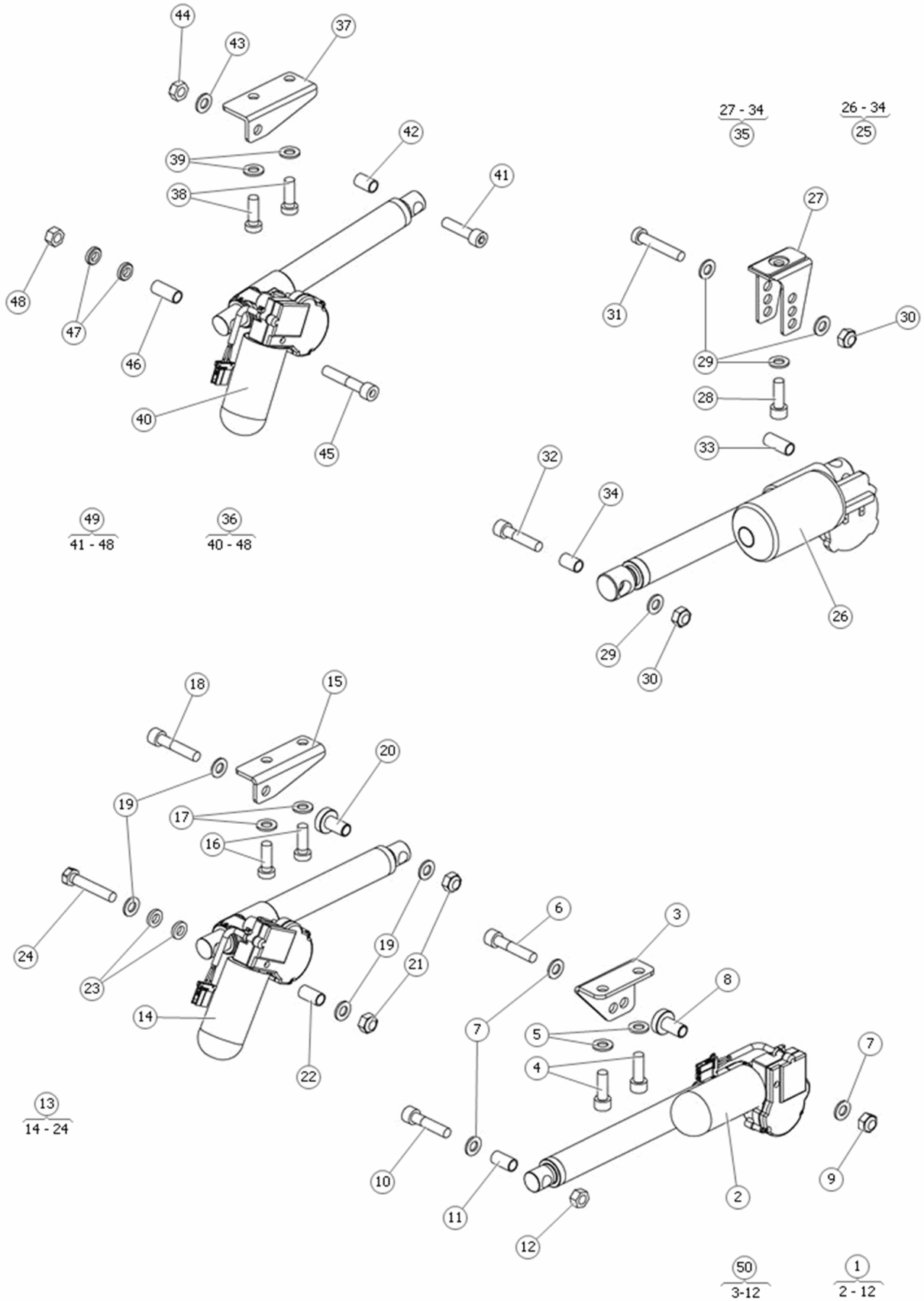
44
43
37
39
38
42
41
48
47
46
40
45
49
41 - 48
36
40 - 48
27 - 34
35
26 - 34
25
27
31
30
29
28
33
32
34
26
29
30
18
15
20
19
17
16
24
23
14
22
19
21
13
14 - 24
6
3
8
7
5
4
10
11
12
2
7
9
50
3-12
1
2 - 12

Pos	Qty	Stock Code	Description	Remark
1	1		ACTUATOR KIT R-net	
2	1	1824118	ACTU ICS LEGREST CII	
3	1		BRACKET ACTU	
3	1		BRACKET ACTUATOR	
4	2	600205-99-0	BOLT MC6S 10x 30 fzb	
5	2	600241-99-0	WASH BRB 10.5x20x2 fzb	
6	1	601227-99-0	BOLT MC6S 10x 50 fzb	
7	3	600241-99-0	WASH BRB 10.5x20x2 fzb	
8	1	1827729	BUSH ACTUATOR MAN BACKR	
8	1		BUSHING ACTU	
9	1	600229-99-0	LOCK NUT M10 fzb ISO 7040	
10	1	600277-99-0	BOLT MC6S 10x 45 fzb	
11	1	1825219	SPACER ACTU L=24 Ø13x1.25	
12	1	600256-99-0	NUT M6M 10 fzb	
13	1	1827462	CONTROL POWER LEGREST	Actuator and mount kit, Lowrider R-Net
14	1	1824119	ACTU ICS LEGREST LOWRIDER	
15	1		BRACKET ACTUATOR	
16	2		SCREW DIN 7984 M10x30 Fe/Zn	
17	2	600241-99-0	WASH BRB 10.5x20x2 fzb	
18	1	601227-99-0	BOLT MC6S 10x 50 fzb	
19	4	600241-99-0	WASH BRB 10.5x20x2 fzb	
20	1	1827729	BUSH ACTUATOR MAN BACKR	
20	1		BUSHING	
21	2	600229-99-0	LOCK NUT M10 fzb ISO 7040	
22	1	1825219	SPACER ACTU L=24 Ø13x1.25	
23	2		WASHER SS 1466 Fe/Zn TBRB 10x18x4	
24	1		SCREW ISO 4017 M10x55 Fe/Zn	
25	1	305275-28-0	CONTROL POWER	
26	1	301982-00-0	LINEAR ACTUATOR 150 STD	
27	1	305232-28-0	ACTU BRACK LEG CII	
28	1	600205-99-0	BOLT MC6S 10x 30 fzb	
29	4	600241-99-0	WASH BRB 10.5x20x2 fzb	
30	2	600229-99-0	LOCK NUT M10 fzb ISO 7040	
31	1	601948-99-0	BOLT MLC6S 10x55 fzb	
32	1	600277-99-0	BOLT MC6S 10x 45 fzb	
33	1	302330-99-0	ACTUATOR BUSSING 30MM	
34	1	301592-99-0	ACTU SLEEVE 20	
35	1	305758-28-0	BOLT KIT ACTU LEG	
35	1	305758-38-0	BOLT KIT ACTU	
36	1	310244-99-0	CTRL PWR LEG CH2k	
37	1	310276-40-0	BRACK ACTU LEGR SEATTILT	
38	2		SCREW DIN 7984 M10x30 Fe/Zn	
39	2	600241-99-0	WASH BRB 10.5x20x2 fzb	
40	1	304263-00-0	ACTUATOR STANDING SEAT	
41	1		SCREW ISO 4762 M10x40 Fe/Zn COAT DIN 267-28	
42	1	301592-99-0	ACTU SLEEVE 20	
43	1	600241-99-0	WASH BRB 10.5x20x2 fzb	
44	1	600229-99-0	LOCK NUT M10 fzb ISO 7040	
45	1	601231-99-0	BOLT MC6S 10x 55 fzb	
46	1	302330-99-0	ACTUATOR BUSSING 30MM	
47	2		WASHER	
48	1	600256-99-0	NUT M6M 10 fzb	
49	1		SCREW KIT P+ LOWRIDER	
50	1	1824180	BOLT KIT ACTU LEGREST +	

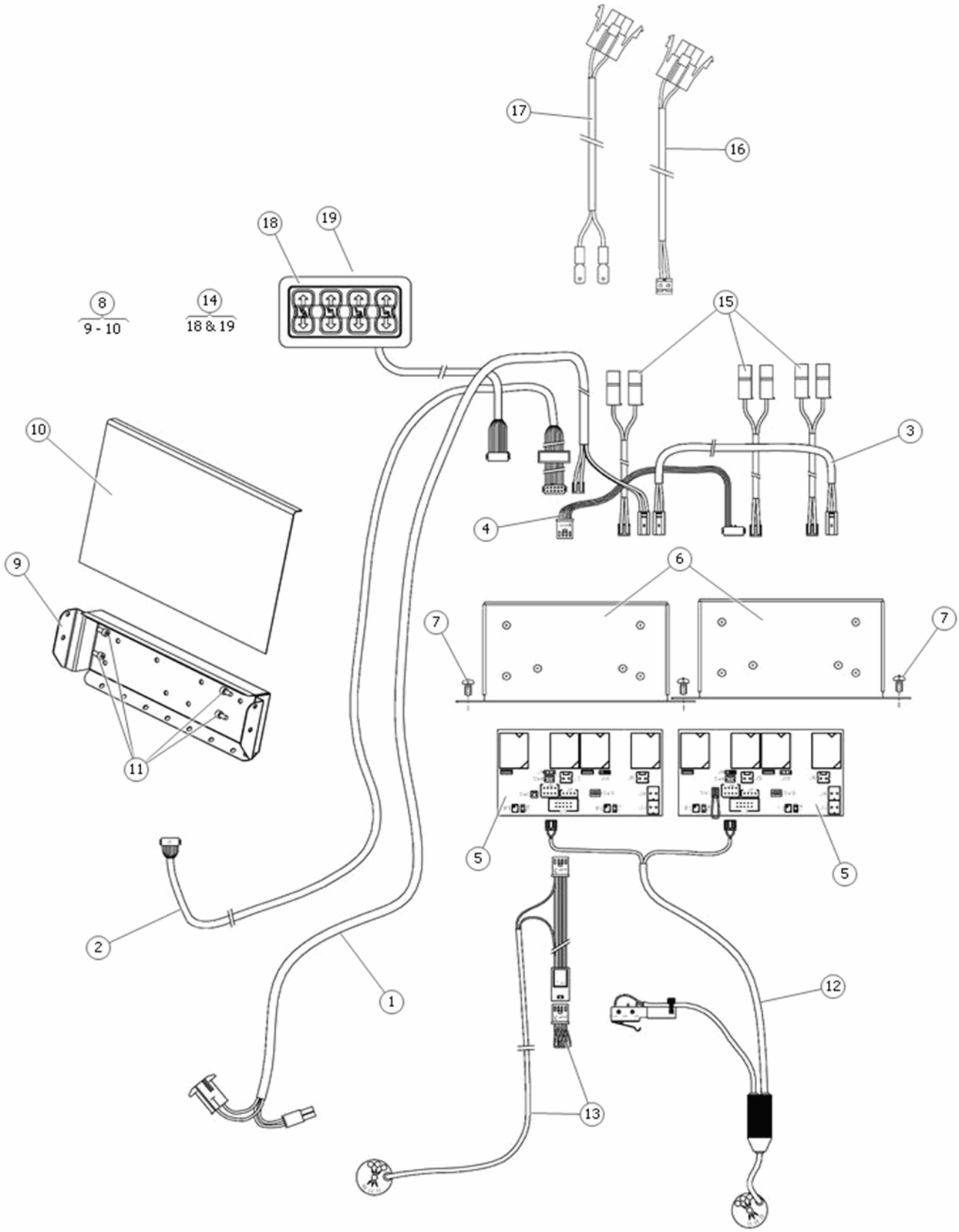
17
16
18
19
8
9 - 10
14
18 & 19
15
10
3
4
9
6
7
7
11
5
5
2
1
12
13

Pos	Qty	Stock Code	Description	Remark
1	1	305346-00-0	CABLE 24V LIN. ACTUATOR	
2	1	305547-00-0	CABLING SWITCHBOX (BASIC)	
3	1	305349-00-0	CABLING +24V 2 EXTRA	
4	1	305350-00-0	CABLING JUMPER 2 EXTRA	
5	2	307131-99-0	PCB ACTUATOR CONTROL	
6	2	305179-99-0	BOX VERTICAL	
7	4	601436-99-0	BOLT MRX-TT-Z 4x8 fzb	
8	1	1824724	COVER/BOX ELECTRONICS	
9	1		PLATE ELECTRONIC	
10	1		PROTECT	
11	4	600182-99-0	BOLT MC6S 4x 8 fzb	
12	1		CABLE ANGELSTOP TILT	
13	1		CABLE ANGELSTOP SEAT ELEVATOR	
14	1		SWITCH BOX	
15	3	305676-00-0	CABLE LINEAR ACTU. CONTR.	
15	1	306293-00-0	CABLE ACTU CONTROL	
16	1	310446-00-0	CABLE ADAPTION ACTU.BACK.	
17	1		CABLE ADAPTER	
17	1		CABLE ADAPTER	
18	1	307966-00-0	SWITCHBOX COVER	
19	1	306020-00-0	SWITCH BOX BOTTOM LOW	
19	1	306021-00-0	SWITCH BOX BOTTOM HIGH	

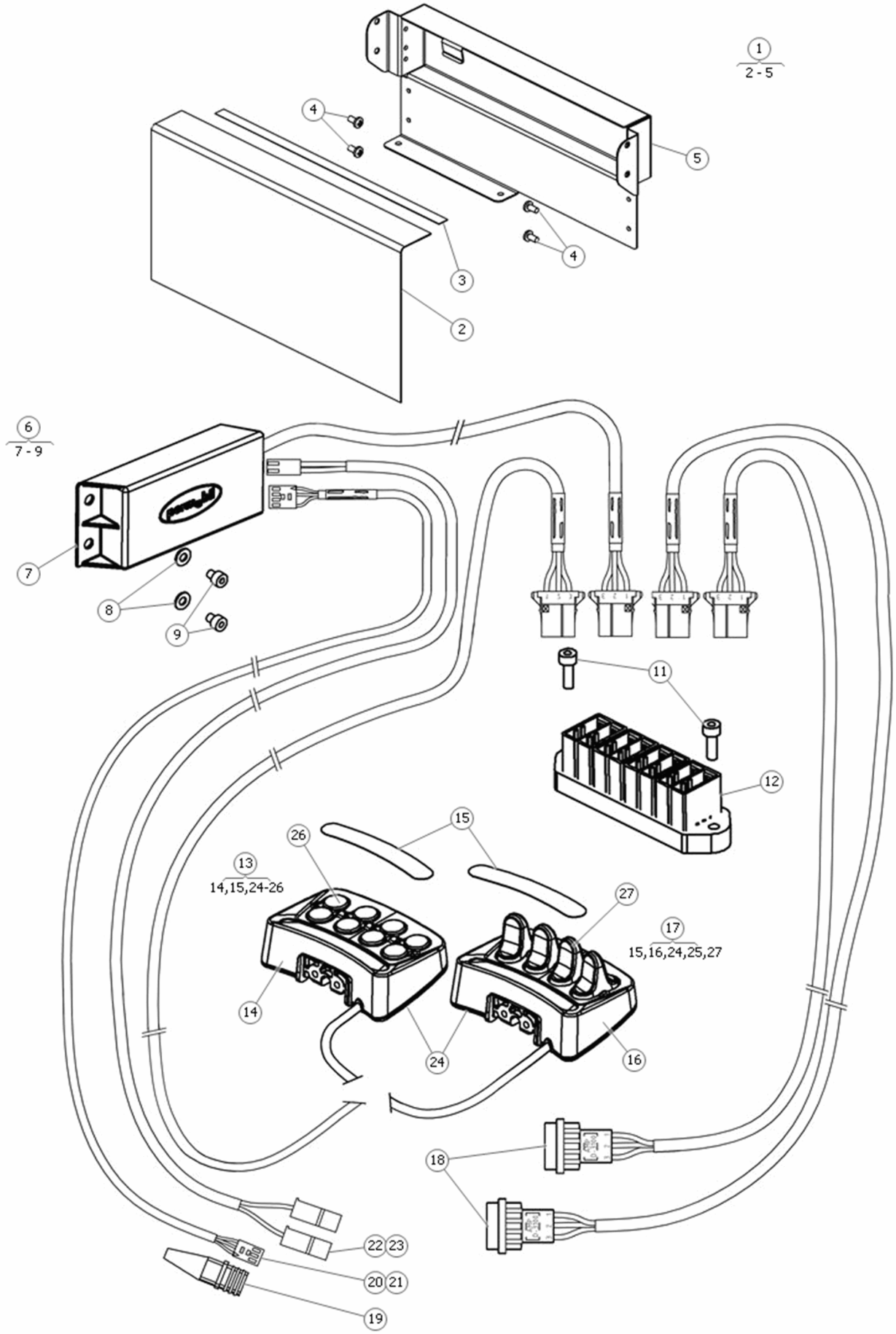
1
2 - 5
4
5
4
3
2
6
7 - 9
7
8
9
11
12
15
26
13
14,15,24-26
27
17
15,16,24,25,27
14
24
16
18
22 23
20 21
19

Pos	Qty	Stock Code	Description	Remark
1	1	1824805	BRACKET ELECTRONICS	
2	1		PROTECT	
3	21		ADHESIVE TRANSFER TAPE	
4	4	601436-99-0	BOLT MRX-TT-Z 4x8 fzb	
5	1		PLATE	
6	1	1822288	ELECTRONICS ICS TILT	
7	1		GENERAL MODULE	
8	2	601296-99-0	WASHER BRB 4.3x 9 fzb	
9	1	601282-99-0	BOLT MC6S 4x 5 fzb	
11	2	601436-99-0	BOLT MRX-TT-Z 4x8 fzb	
12	1	1821304	JUNCTION BOX	
13	1	1823293	SWITCHBOX ICS BUTTONS 1	
14	1		TO ORDER SEE POSITION #14	
14	1	1823293	SWITCHBOX ICS BUTTONS 1	
15	1	1822329	DECAL SET SWITCHBOX ICS	
16	1		TO ORDER SEE POSITION #17	
16	1	102799-99-0	SWITCH BOX WITH TOGGLE	
17	1	1823294	SWITCHBOX ICS TOGGLES	
18	2	1821827	CABLE EXTENSION ICS 700MM	
19	1		PROTECT COVER	
20	1	1822290	CABLE SOFT POT ICS 1000MM	
21	1	1822369	CABLE SOFT POT SEAT	
22	1	305677-00-0	CABLE LINEAR ACTU. CONTR.	
23	1	1822368	CABLE ACTUATOR SEAT TILT	
24	1	1826515	SWITCH BOX BOTTOM ICS	
26	1	1823850	PUSH BUTTON OVERLAY ICS	
27	1	1823851	TOGGLE OVERLAY ICS SWITCH	

When you order spare parts, the following must always be specified:

- The product model (for example, power wheelchair C300).
- The description of the part.
  - always use the description used in this catalog.
- The entire part number.
- The quantity.

NB! *In some cases, parts appear in the spare part catalog without a part number. This means that the part cannot be ordered from Permobil. We have, however, chosen to describe it for your information. Standard components such as screws, nuts, washers and similar parts can be purchased in an ordinary shop using the information in this catalog.*

Description of Positioning list

The positioning list consist of:

A = Indicates the sparepart-group covered by the catalog.
B = Indicates part of the sparepart-group.

C = Under C there are five columns:

1 = Pos.no: Position number
2 = Pcs: Total number of given pos-no.
3 = Part no.: Part number
4 = Description: Article name
5 = Remark: Reserved for additional information such as reservations, restrictions etc.

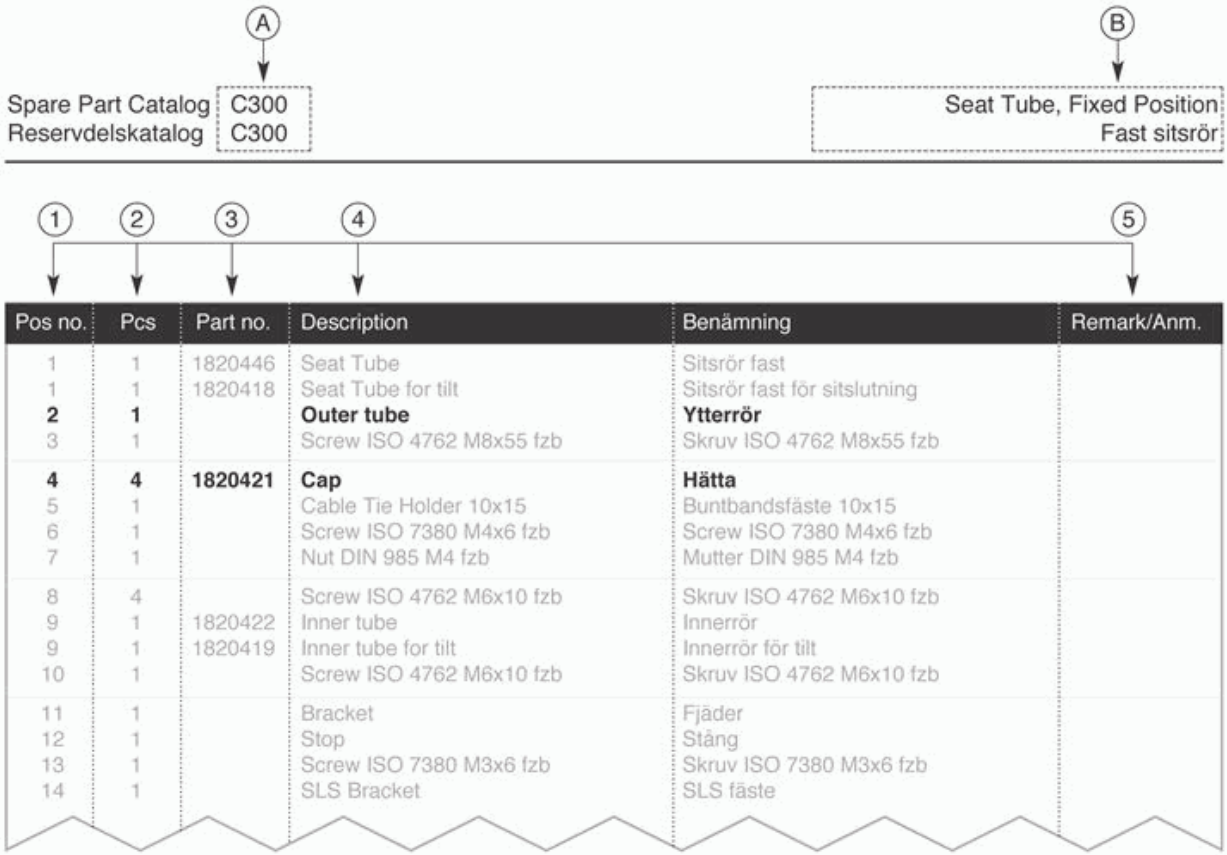

Pos no.	Pcs	Part no.	Description	Benämning	Remark/Anm.
1	1	1820446	Seat Tube	Sitsrör fast	
1	1	1820418	Seat Tube for tilt	Sitsrör fast för sitslutning	
2	**1**		**Outer tube**	**Ytterrör**	
3	1		Screw ISO 4762 M8x55 fzb	Skruv ISO 4762 M8x55 fzb	
4	**4**	**1820421**	**Cap**	**Hätta**	
5	1		Cable Tie Holder 10x15	Buntbandsfäste 10x15	
6	1		Screw ISO 7380 M4x6 fzb	Screw ISO 7380 M4x6 fzb	
7	1		Nut DIN 985 M4 fzb	Mutter DIN 985 M4 fzb	
8	4		Screw ISO 4762 M6x10 fzb	Skruv ISO 4762 M6x10 fzb	
9	1	1820422	Inner tube	Innerrör	
9	1	1820419	Inner tube for tilt	Innerrör för tilt	
10	1		Screw ISO 4762 M6x10 fzb	Skruv ISO 4762 M6x10 fzb	
11	1		Bracket	Fjäder	
12	1		Stop	Stång	
13	1		Screw ISO 7380 M3x6 fzb	Skruv ISO 7380 M3x6 fzb	
14	1		SLS Bracket	SLS fäste	

Part

A part consists of one or more parts. If a part consists of several parts, a bracket in connection with the part's item bubble is used to show the parts included in the part in the exploded views. See example 1.

Quantity

The quantity specified in front of a part is the total quantity for the entire product.

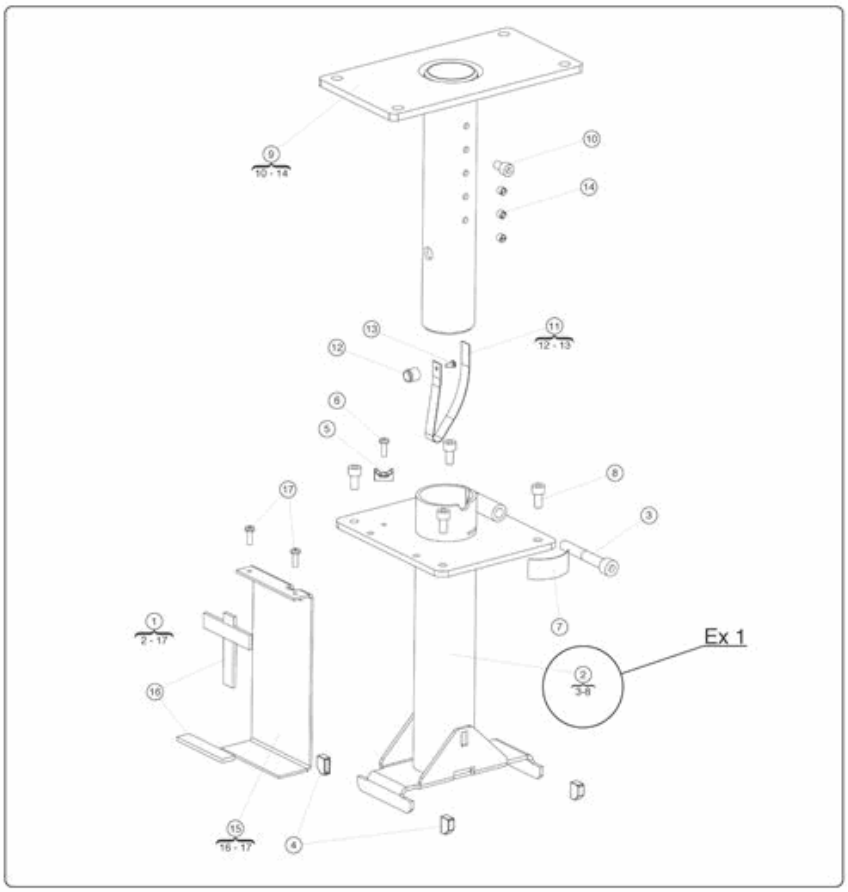

Example 1:

The fixed seat tube, pos 2, includes pos 3 to 8, that are indicated in the bracket below (see above).

Example 2:

If a outer tube, pos 2, is ordered, the quantity is 1. In other words, there is just one outer tube on the chassis. However, if you look at the number of parts included, the quantity may vary. For example, in pos 4, the complete outer tube comprises 4 parts.

Vid beställning av reservdelar skall följande alltid anges:

- Produktmodell (ex.vis elrullstol C300).
- Artikelns benämning.
  - använd samma benämning som i denna reservdelskatalog vid beställning.
- Hela artikelnumret.
- Antal.

OBS! *I reservdelskatalogen förekommer i vissa fall detaljer utan angivet artikelnr. Det innebär att detaljen inte går att beställa från Permobil, men vi har ändå valt att beskriva dem för din information. Standardkomponenter så som skruv, mutter, bricka och liknande detaljer kan införskaffas i den ordinarie detaljhandeln med hjälp av informationen i denna katalog.*

Beskrivning av positionslistor

Positionslistan består av:

A = Visar vilken produkt katalogen beskriver.
B = Visar vilken del av produkten som visas på aktuell sida.
C = Under C finns fem kolumner:

- **1** = Pos.no: Positionsnummer
- **2** = Pcs: Antal detaljer som ingår i aktuellt pos.nummer
- **3** = Part no.: Artikelnummer
- **4** = Benämning: Artikelns benämning (svensk och engelsk benämning)
- **5** = Anmärkning: Plats för ev. tilläggsinformation, förbehåll etc.

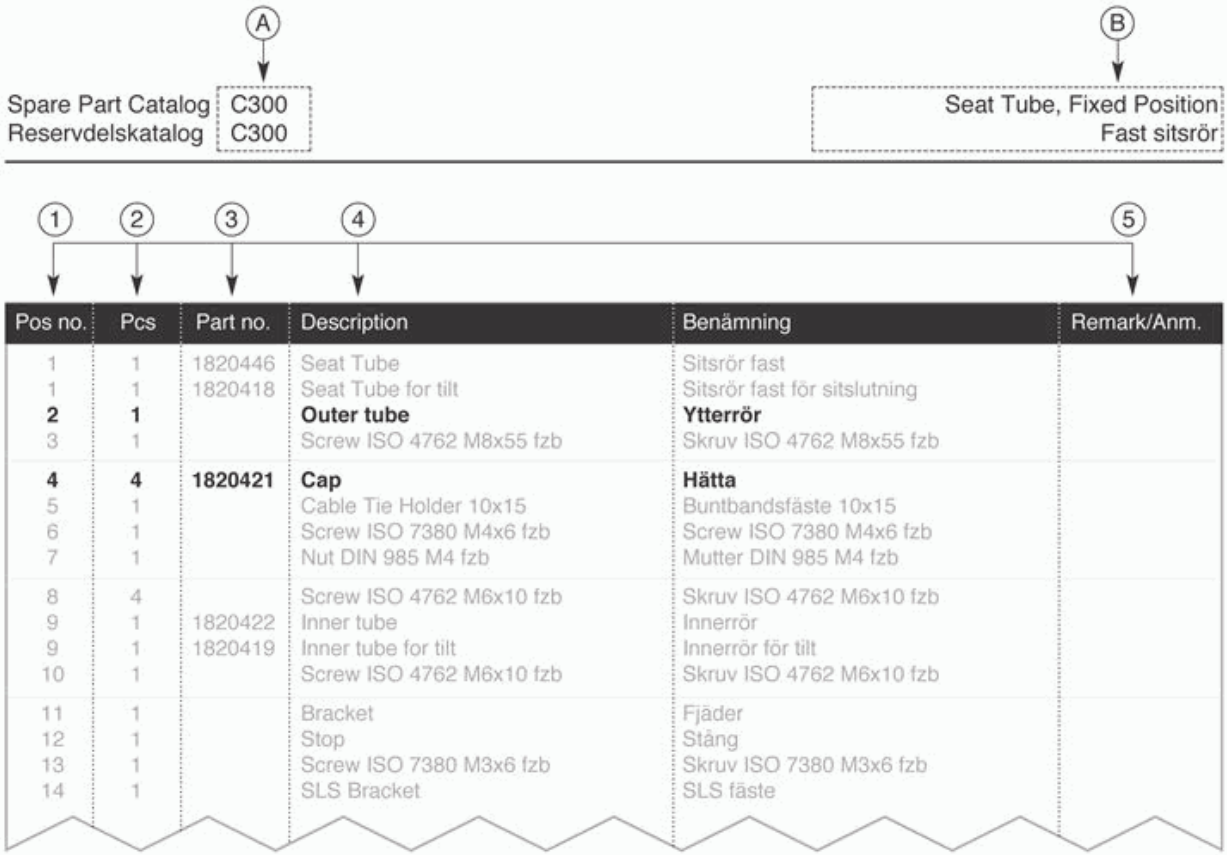

Pos no.	Pcs	Part no.	Description	Benämning	Remark/Anm.
1	1	1820446	Seat Tube	Sitsrör fast	
1	1	1820418	Seat Tube for tilt	Sitsrör fast för sitslutning	
2	**1**		**Outer tube**	**Ytterrör**	
3	1		Screw ISO 4762 M8x55 fzb	Skruv ISO 4762 M8x55 fzb	
4	**4**	**1820421**	**Cap**	**Hätta**	
5	1		Cable Tie Holder 10x15	Buntbandsfäste 10x15	
6	1		Screw ISO 7380 M4x6 fzb	Screw ISO 7380 M4x6 fzb	
7	1		Nut DIN 985 M4 fzb	Mutter DIN 985 M4 fzb	
8	4		Screw ISO 4762 M6x10 fzb	Skruv ISO 4762 M6x10 fzb	
9	1	1820422	Inner tube	Innerrör	
9	1	1820419	Inner tube for tilt	Innerrör för tilt	
10	1		Screw ISO 4762 M6x10 fzb	Skruv ISO 4762 M6x10 fzb	
11	1		Bracket	Fjäder	
12	1		Stop	Stång	
13	1		Screw ISO 7380 M3x6 fzb	Skruv ISO 7380 M3x6 fzb	
14	1		SLS Bracket	SLS fäste	

Artikel

En artikel består av en eller flera detaljer. Om en artikel består av flera detaljer är det markerat i sprängskisserna med ett klamer i anslutning till artikelns posbubbla där det står vilka detaljer som ingår i artikeln. se Ex 1.

Antal

Det angivna antalet framför en artikel är det sammanlagda antalet för hela produkten.

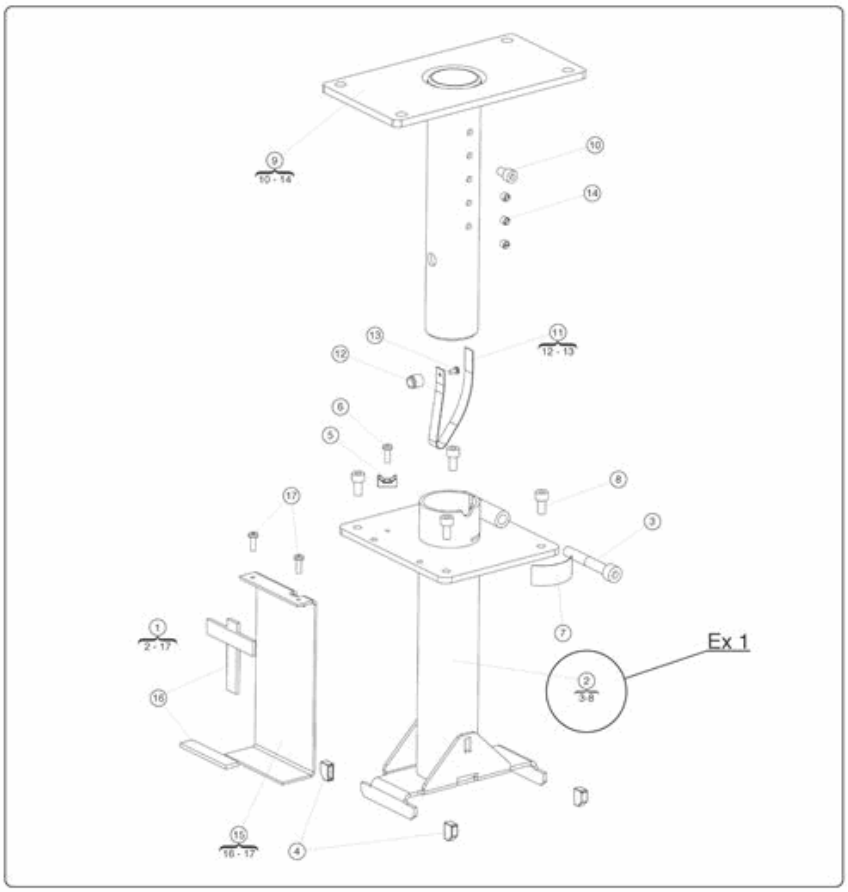

Ex 1:

I fast sitsrör Pos. 2, ingår poserna 3till 8 som står i klamret under. (se ovan)

Ex 2:

Beställs ettYtterrör, pos. 2, så står det att antalet är 1. Det finns med andra ord bara ett ytterrör på chassit. Men om man tittar på antalet i ingående detaljer, så kan antalet variera, i tex. pos 4 är det 4 st för att ytterröret ska vara komplett.

Notes

Notes

PAB no: 1258-1