SPARE PART CATALOG

Corpus

for X850

Seating system for Permobil power wheelchair

Corpus

Spare Part Catalog
Reservdelskatalog

CONTACT PERMOBIL:

Permobil AB
Box 120
861 23 Timrå
Sverige
Tel: 060-59 59 00
Fax: 060-57 52 50
E-post: info@permobil.se

Permobil Inc. USA
6961 Eastgate Blvd.
Lebanon, TN 37090
USA
Phone: 800-736-0925
Fax: 800-231-3256
Email: info@permobilusa.com

Permobil AS
Hvamsvingen 22
2013 Skjetten
Norge
Tlf. 48 12 90 00
Fax. 63 84 48 50
E-post: firmapost@permobil.no

Permobil Europe BV
De Doom 22
NL-6419 CX Heerlen
Netherlands
Tel: +31 (0)45 564 54 90
Fax: +31 (0) 45 564 54 91
Email: europe@permobil.nl

Produced and published by Permobil AB, Sweden
Edition no. 1, 2009-02
PAB: 1264-1

Contents **Page**

Seat frame.....6 - 7
Seat extensions and reductions .....8 - 9
Seat tilt.....10 - 11
Backrest .....12 - 13
Backrest recline options .....14 - 15
Armrest .....16 - 17
Panelhollders .....18 - 19
Cushions .....20 - 21
Ordering Information .....22 - 23

Innehåll **Sida**

Sitsram ..... 6 - 7
Sitsförstoring/förkortning .....8 -9
Sitslutning .....10 - 11
Ryggstöd .....12 - 13
Ryggstöds regleringar .....14 - 15
Armstöd .....16 - 17
Panelhållare .....18 - 19
Dyner.....20 - 21
Beställningsinformation .....24 - 25

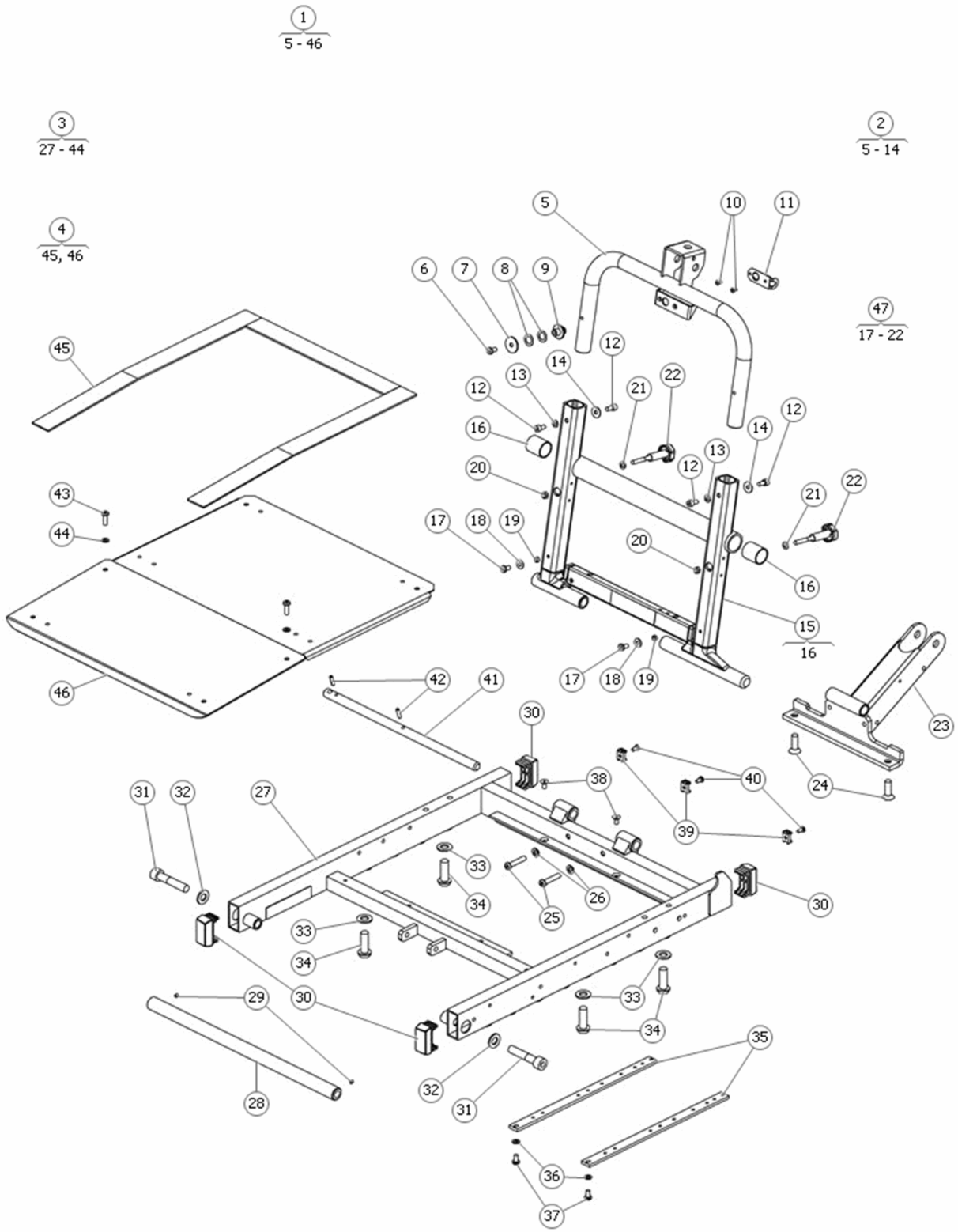
1
5 - 46
3
27 - 44
2
5 - 14
4
45, 46
47
17 - 22
15
16

Pos	Qty	Stock Code	Description	Remark
1	1		SEAT FRAME	
2	1	308085-28-0	REINF.KIT BACKR. CII	
3	1	301573-28-0	SEAT FRAME CII	
3	1	301573-28-0	SEAT FRAME CII	
3	1	301573-38-0	SEAT FRAME C II	
4	1	1827463	SEAT PLATE CII X850	
5	1		BACKREST REINFORCEM	
6	1	601353-99-0	BOLT K6S 5x10 fzb	
7	1	601935-99-0	WASH SRKB 5.5x22x1.5	
8	2		SHIM WASHER, 10x16x0.5 DIN 988	
9	1	306068-99-0	QUICK LOCK PIN BACK CII	
10	2	601972-99-0	DUMMY RIVET TAP/K 44 BS	
11	1	601375-99-0	QUICKLOCK SERIE 1500	
12	4	600189-99-0	BOLT MC6S 5x10 fzb	
13	2	600237-99-0	WASH BRB 5.3x10x 1 fzb	
14	1	612857-99-0	WASHER 5,3x15x1 FZB ISO	
15	1	309016-28-0	BACKR HINGE MID.MOUNT CII	
16	2	601844-99-0	SLIDE BEAR 202325 A	
17	2	601353-99-0	BOLT K6S 5x10 fzb	
18	2	600842-99-0	WASH BRB 5.3x12x 1 fzb	
19	2	306081-99-0	SPACER 3 Ý 7/5	
20	2	600226-99-0	LOCK NUT M5 FZB	
21	2	600237-99-0	WASH BRB 5.3x10x 1 fzb	
22	2	306387-00-0	STAR HANDLE BACKR CII	
23	1		BRACKET	
24	1		SCREW, M8x25 Fe/Zn ISO 10642	
25	1	601372-99-0	BOLT K6S 6x45 fzb	
25	1	602035-99-0	BOLT K6S 6x30 fzb	
26	2	600238-99-0	WASHER BRB 6.4X12 FZB	
27	1		FRAME	
28	1	304275-28-0	SUPP.TUBE SEAT PLATE CII	
28	1	304275-28-0	SUPP.TUBE SEAT PLATE CII	
28	1	304275-38-0	SUPP TUBE SEAT PLATE CII	
29	1	600212-99-0	SET SCREW SK6SS 4x4	
30	4	1821420	PLAST.PLUG SEATFRAME CII	
31	2	601227-99-0	BOLT MC6S 10x 50 fzb	
32	2	600241-99-0	WASH BRB 10.5x20x2 fzb	
33	4	600241-99-0	WASH BRB 10.5x20x2 fzb	
34	1		BOLT K6S 10x30 fzb	
35	2		BRACKET	
36	2	600237-99-0	WASH BRB 5.3x10x 1 fzb	
37	2	601353-99-0	BOLT K6S 5x10 fzb	
38	1	601708-99-0	BOLT MF6S 5x10 fzb	
39	3	601204-99-0	CABLE TIE HOLD TM 2 S8	
40	3	601436-99-0	BOLT MRX-TT-Z 4x8 fzb	
41	1	302521-99-0	SHAFT BACKREST HINGE CII	
42	2	601124-99-0	EXPANDER PIN FRP 4x16	
43	2	601170-99-0	BOLT K6S 5x16 fzb	
44	2	600237-99-0	WASH BRB 5.3x10x 1 fzb	
45	1060	600587-99-0	VELCRO HOOK SELF.ADHES	
46	1		PLATE	
47	1	306790-99-0	BOLT KIT BACK CII	

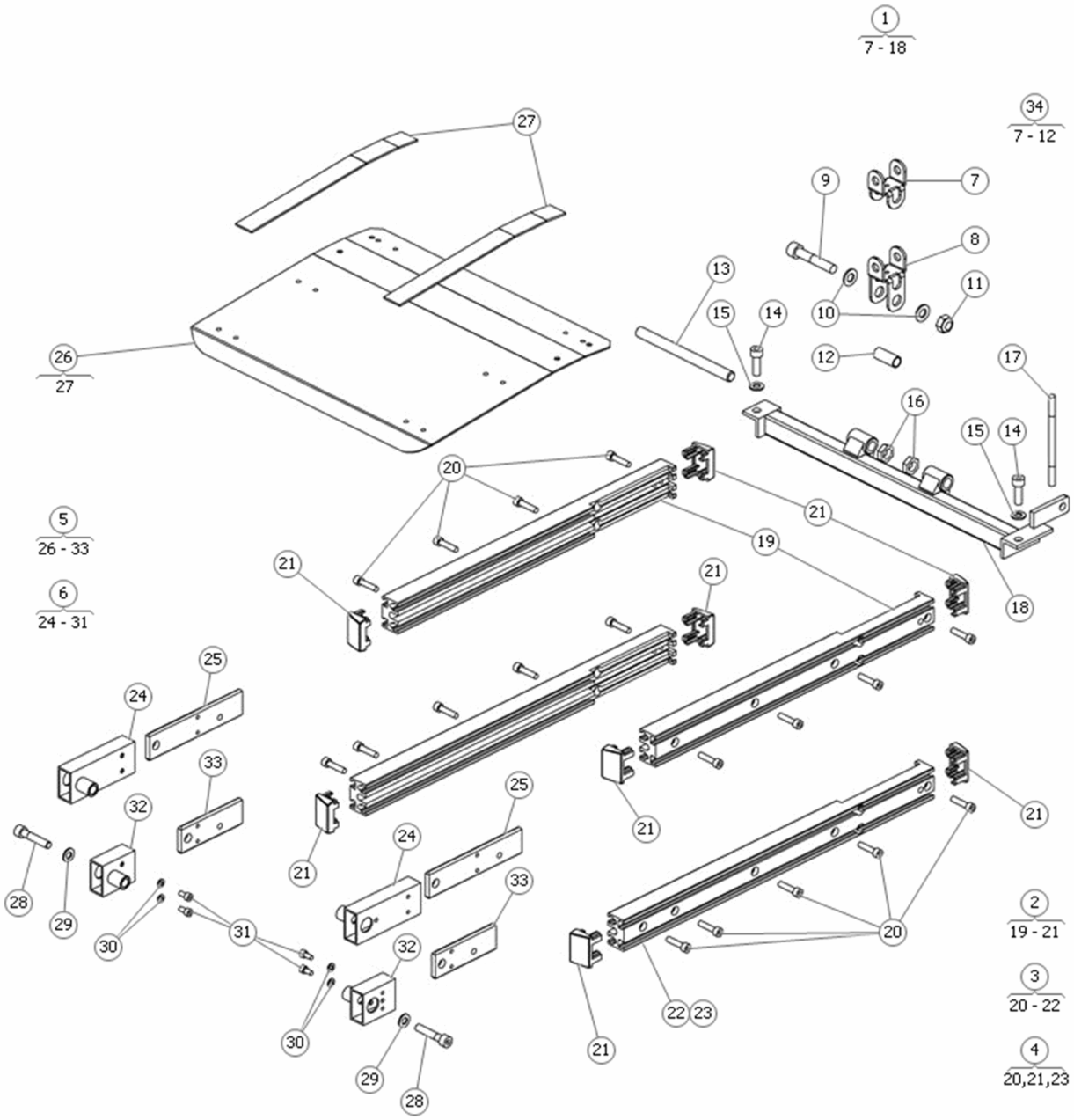
1
7 - 18
34
7 - 12
27
26
27
5
26 - 33
6
24 - 31
2
19 - 21
3
20 - 22
4
20,21,23

Pos	Qty	Stock Code	Description	Remark
1	1	305265-28-0	SEAT REDUC -50 PLG ARMR	-50 mm or -100 mm
2	1	1822380	BAR UNITRAC CII STD	
2	1	1822383	BAR ACCESSORIE UNITRAC	
3	1	1822381	BAR UNITRAC CII +50	
3	1	1822384	BAR ACCESSORIE UNITRAC	
4	1	1822382	BAR ACCESSORIE UNITRAC	
4	1	1822385	BAR ACCESSORIE UNITRAC	+100 extension
5	1	1821716	SEAT EXT +50MM CII X850	Seat frame extension +50
6	1	1821717	SEAT EXT +100MM CII X850	Seat frame extension +100
7	1		BRACKET	
8	1		BRACKET	
9	1	601231-99-0	BOLT MC6S 10x 55 fzb	
10	2	600241-99-0	WASH BRB 10.5x20x2 fzb	
11	1	600229-99-0	LOCK NUT M10 fzb ISO 7040	
12	1	302330-99-0	ACTUATOR BUSSING 30MM	
13	1		BAR	
14	2	600499-99-0	BOLT MC6S 8x 25 fzb	
15	2	600239-99-0	WASHER BRB 8.4X16 FZB	
16	2	600759-99-0	NUT ML6M 12x1.5 fzb	
17	1	303716-99-0	BOLT PS 8x115 fzb	
18	1		SEAT REDUC	
19	2		BRACKET	
20	8	600195-99-0	BOLT MC6S 6x25 fzb	10 screws for +50 and +100 extensions
21	1	1824301	PLASTPL 11x40	
21	1	1824302	PLASTPL 25x40	
22	2		BRACKET	+50 extension
23	2		BRACKET	+100 extension
24	2	303172-28-0	SEAT EXT SECTION +100 CII	Seat frame extension +100
24	2	303172-38-1	SEAT EXT SECTION +100	Seat frame extension +100
24	2	303172-38-2	SEAT EXT SECTION +100	Seat frame extension +100
24	2	309254-28-0	SEAT EXT KIT +100 HD	Seat frame extension +100
25	2		PLATE	For +100
26	1		SEATPLATE	
27	0	600587-99-0	VELCRO HOOK SELF.ADHES	
28	2	600274-99-0	BOLT MC6S 8x 40 fzb	
29	2	600239-99-0	WASHER BRB 8.4X16 FZB	
30	4	600237-99-0	WASH BRB 5.3x10x 1 fzb	
31	4	600189-99-0	BOLT MC6S 5x10 fzb	
32	2	303169-28-0	SEAT EXT SECTION +50 CII	Seat frame extension +50
32	2	303169-38-1	SEAT EXT SECTION +50	Seat frame extension +50
32	2	303169-38-2	SEAT EXT SECTION +50	Seat frame extension +50
33	2		PLATE	For +50
34	1	308594-99-0	ACTU.BRACK.LOWER SEAT	

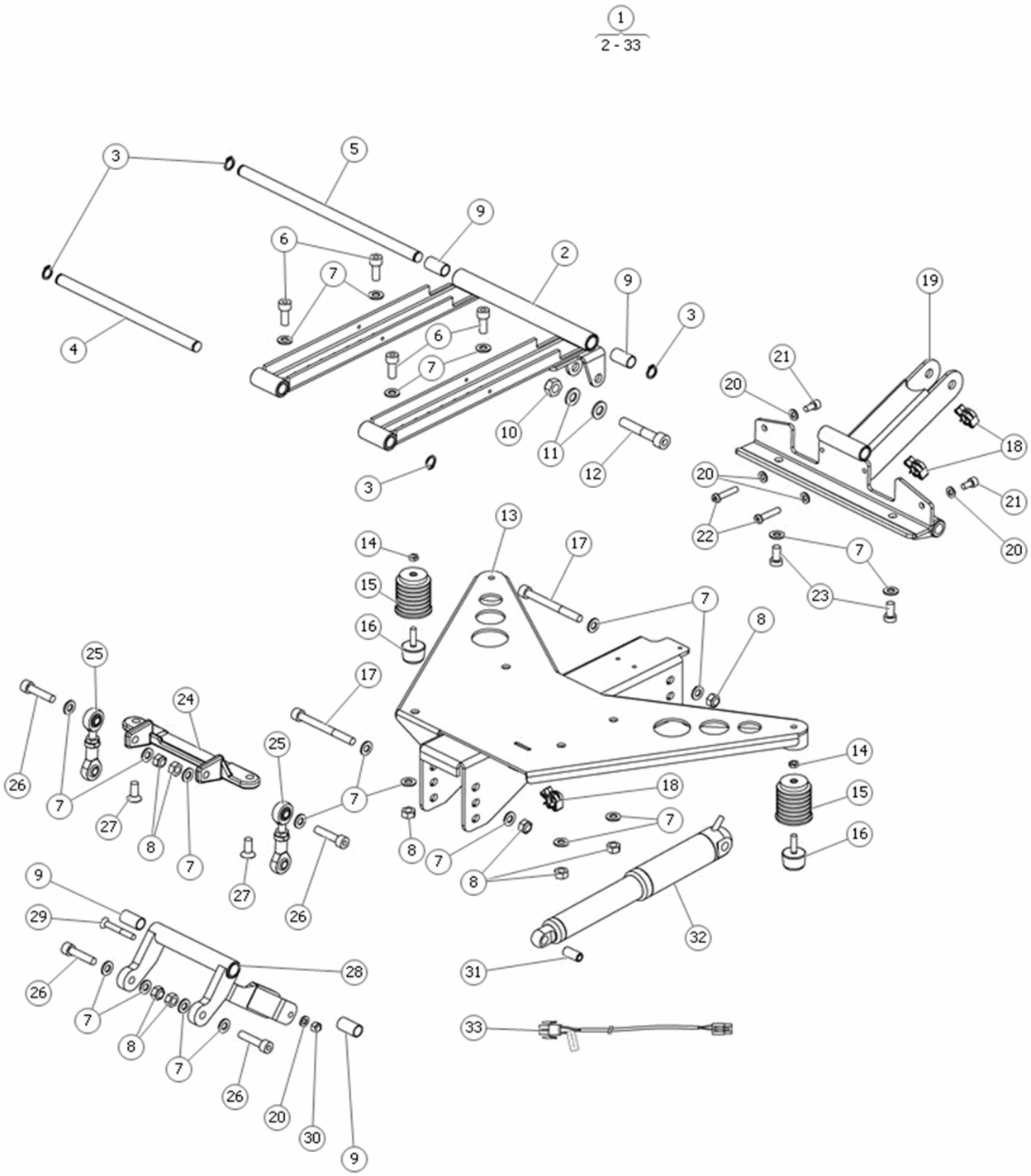
1
2 - 33

Pos	Qty	Stock Code	Description	Remark
1	1	1823702	SEAT TILT 16° X850	
2	1		FRAME	
3	1	601225-99-0	CIRCLIP SGA 12	
4	1	302679-99-0	SHAFT FRONT HINGE SEAT	
5	1		SHAFT	
6	1	600203-99-0	BOLT MC6S 8x 20 fzb	
7	1	600239-99-0	WASHER BRB 8.4X16 FZB	
8	1	600228-99-0	LOCK NUT M8 FZB	
9	1	602186-99-0	SLIDE BEAR 121425 F	
10	1	600229-99-0	LOCK NUT M10 fzb ISO 7040	
11	1	600241-99-0	WASH BRB 10.5x20x2 fzb	
12	1	601231-99-0	BOLT MC6S 10x 55 fzb	
13	1		BODY	
14	1		NUT, M6 Fe/Zn ISO 4035	
15	1		BELLOW	
16	1		RUBBER BLOCK	
17	1		SCREW, M8x80 Fe/Zn ISO 4762	
18	1		CABLE CLIP	
19	1	1820414	REAR HINGE SEAT TILT 20°	
20	1	600238-99-0	WASHER BRB 6.4X12 FZB	
21	1	600192-99-0	BOLT MC6S 6x12 fzb	
22	1	602035-99-0	BOLT K6S 6x30 fzb	
23	1		SCREW, M8x16 Fe/Zn DIN 7984	
24	1	302681-40-0	SEAT MOUNT SEATTILT	OBSOLETE ONCE ZERO INVENTORY
25	1		FORK LINK	
26	1	600273-99-0	BOLT MC6S 8x 35 fzb	
27	1	1820410	BOLT ISO 10642 M8x20 ESL	
28	1		ARM	
29	1	601177-99-0	BOLT MF6S 6x45 fzb	
30	1	600227-99-0	LOCK NUT M6 FZB	
31	1		BUSHING	
32	1	1823703	ACTU CON35 170+100	
33	1	1823704	CABLE SEAT TILT X850	

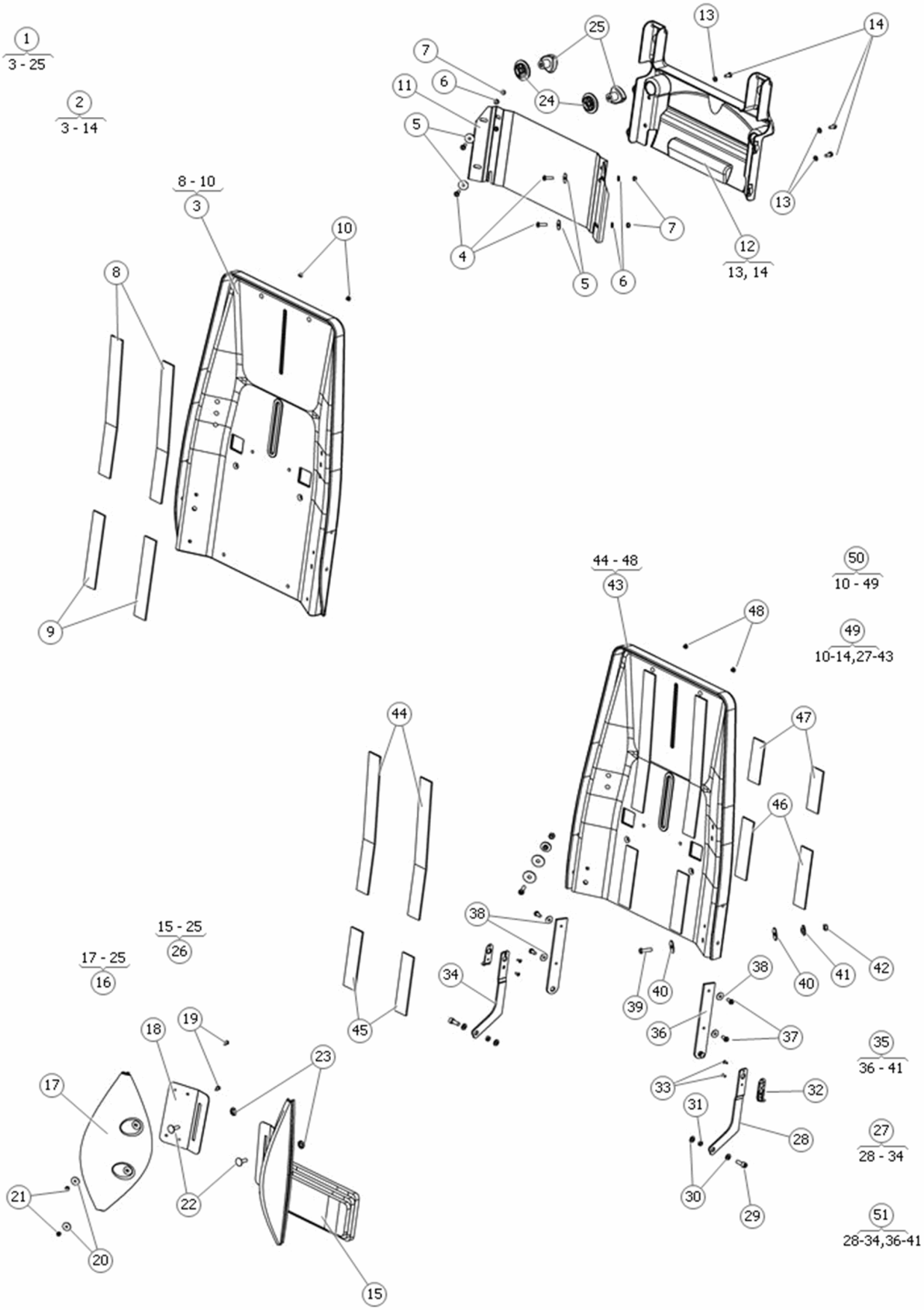
1
3 - 25
2
3 - 14
8 - 10
3
10
8
9
7
6
11
5
25
24
13
14
4
5
6
7
12
13, 14
13
44 - 48
43
50
10 - 49
48
49
10-14,27-43
44
47
46
38
34
45
39
40
38
40
41
42
36
37
15 - 25
26
17 - 25
16
18
19
23
17
22
21
20
15
33
31
32
28
30
29
35
36 - 41
27
28 - 34
51
28-34,36-41

Pos	Qty	Stock Code	Description	Remark
1	1	303892-00-0	BACKREST CORPUS +10 BLACK	
1	1	305300-00-UD-0	BACKREST KIT C II	
1	1	305480-00-UD-0	BACKREST KIT NARROW -50	
1	1	305490-00-90-0	BACKREST KIT WIDE +50 CII	INCLUDES BACK CUSHION
1	1	305490-00-UD-0	BACKREST KIT WIDE +50 CII	
1	1		BACKREST KIT 350x545	
1	1		BACKREST KIT 400x545	
1	1		BACKREST KIT 450x545	
1	1	311106-00-UD-0	BACKR KIT EX LOW NARROW	
2	1	303892-00-0	BACKREST CORPUS +10 BLACK	
2	1		BACKREST KIT 450x615	
2	1		BACKREST KIT 400x545	
2	1		BACKREST KIT 450x545	
2	1		BACKREST KIT 400x615	
3	1	303636-00-0	BACKREST CII	
3	1	303892-00-0	BACKREST CORPUS +10 BLACK	
3	1	305385-00-0	BACKR NARROW CII	
3	1	305545-00-0	BACKREST WIDE +50 CII	
3	1	305545-15-0	BACKR WI +50 CII	
3	1	310029-00-0	BACKR SHORT NARROW-50	
3	1	310032-00-0	BACKR SHORT CII	
3	1	310035-00-0	BACKR SHORT WI +50 CII	
4	4	601170-99-0	BOLT K6S 5x16 fzb	
5	4	600867-99-0	WASH NB 5x19x1 fzb	
6	4	600237-99-0	WASH BRB 5.3x10x 1 fzb	
7	4	600226-99-0	LOCK NUT M5 FZB	
8	2		VELCRO TAPE L=300	
9	2		VELCRO TAPE L=170	
10	2		PLASTIC PLUG Ø9x5,2 (Ø4,4)	
11	1	305199-40-0	BACKR PLATE SLIDE CII	
11	1	305251-40-0	BACKR PLATE CII	
11	1	305256-40-0	BACKR PLATE NARROW CII	
11	1	305360-40-0	BACKR PLATE WI CII	
11	1		BACKR PLATE SLIDE +50	
12	1	306363-00-0	COVER BACKREST CII	
13	4	600237-99-0	WASH BRB 5.3x10x 1 fzb	
14	4	601159-99-0	BOLT K6S 5X12 FZB	
15	1	306396-99-0	LUMBAR SUPPORT CII	
16	1	306400-00-0	LATERAL SUPPORT V2 wide=	
16	1	306424-00-0	LATERAL SUPPORT V2 wide=	
17	1		LAT SUPP PLASTIC HVII VII VIII CII	
18	1		BRACKET LAT.SUPP V.2 CII HVII VII VIII	
18	1	306405-99-0	BRACKET WI.BACK LAT.SUPP	
19	4	601187-99-0	BOLT K6S 4x10 fzb	
20	4	601974-99-0	WASH BRB 4.3x16x 1 fzb	
21	4	600225-99-0	LOCK NUT M4 FZB	
22	2	601882-99-0	BOLT MVBF 6x20 H fzb	
23	1	601386-99-0	LOCK WASH S-LOCK 6x15.3	
24	2		WASH LAT SUPP V.2 CII HV V VIII	
25	2	306387-00-0	STAR HANDLE BACKR CII	for the new cover (electronics inside)
25	2	601943-99-0	STAR HANDLE VTR.40 B-M6	
26	1		ERGO KIT 400	
26	1		ERGO KIT 480	
27	1		INSTALL ASSEMBLY	
28	1		PLATE LEFT	
29	2	600743-99-0	BOLT MC6S 6x16 fzb	
30	4	600238-99-0	WASHER BRB 6.4X12 FZB	
31	2	304815-99-0	BUSHING Ý 9	
32	2	601375-99-0	QUICKLOCK SERIE 1500	
33	4	601972-99-0	DUMMY RIVET TAP/K 44 BS	
34	1		PLATE RIGHT	
35	1		INSTALL ASSEMBLY	
36	2		LOCK	
37	4	601159-99-0	BOLT K6S 5X12 FZB	
38	1	612857-99-0	WASHER 5,3x15x1 FZB ISO	
39	2	601370-99-0	BOLT K6S 6x20 fzb	
40	4	601939-99-0	WASH SRKB 7x25x1.5 fzb	
41	2	305268-99-0	SPACER LOWER BACKR SLIDE	
42	2	600227-99-0	LOCK NUT M6 FZB	
43	1	305191-00-0	BACKR SLIDE CII	SHELL ONLY 16" SLIDING BACK
43	1	305389-00-0	BACKR WI+50 SLIDE CII	SHELL ONLY 18" SLIDING BACK
43	1	311107-00-0	BACKR.EX.LOW STD SLIDE	Height = 410 mm, standard, sliding back.
43	1	311109-00-0	BACKR.EX.LOW WIDE CII	Height = 410 mm, wide, sliding back.
44	2		VELCRO TAPE L=300	
45	2		VELCRO TAPE L=125	
46	2		VELCRO TAPE L=125	
47	2		VELCRO TAPE L=90	
48	2		PLASTIC PLUG Ø9x5,2 (Ø4,4)	
49	1		BACKREST KIT 400x545	
49	1		BACKREST KIT 450x545	
50	1	305200-00-80-0	BACKR KIT SLIDE CII	Incl. cushion
50	1	305200-00-90-0	BACKR KIT SLIDE	Incl. cushion
50	1	305200-00-UD-0	BACKREST KIT SLIDE	

Pos	Qty	Stock Code	Description	Remark
50	1	305252-00-80-0	BACKR KIT WI +50 SLIDE	Incl. cushion
50	1	305252-00-90-0	BACKR KIT WI +50 SLIDE	Incl. cushion
50	1	305252-00-UD-0	BACKRESTKIT WIDE SLIDE	
51	1	1828886	INSTALL KIT BACKR SLIDE C	

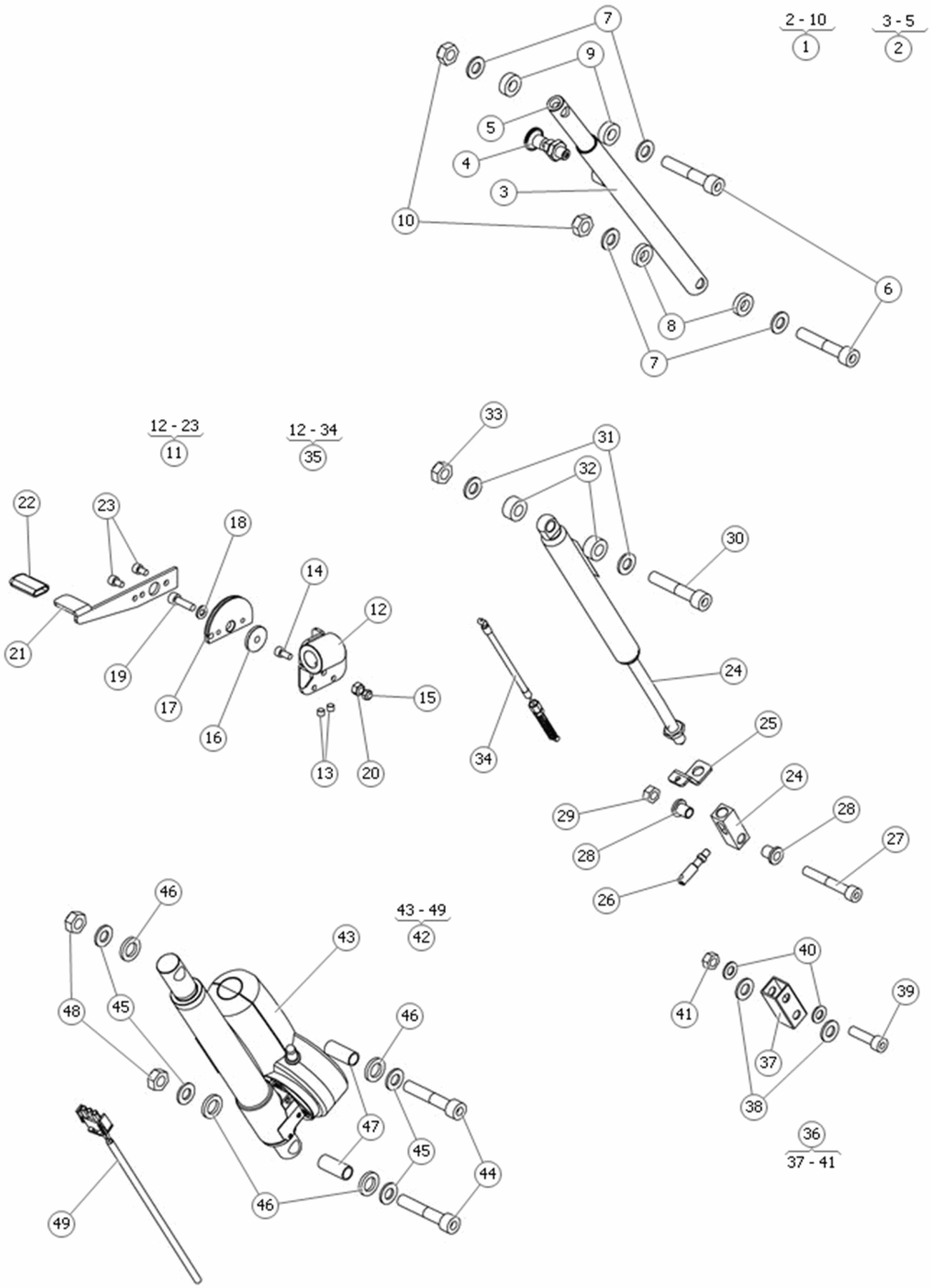
2 - 10
1
3 - 5
2
12 - 23
11
12 - 34
35
43 - 49
42
36
37 - 41

Pos	Qty	Stock Code	Description	Remark
1	1	312332-40-0	CTRL MAN BACK CHHD HD	
2	1	312853-40-0	TUBE ADJUST MAN CTRL LEG-	
3	1		OUTER TUBE	
4	1	602328-00-0	ADJ BOLT GN617 AK5	
5	1		INNER TUBE L=240	
6	2	601231-99-0	BOLT MC6S 10x 55 fzb	
7	4	600241-99-0	WASH BRB 10.5x20x2 fzb	
8	1		SPACER NYLON 10.5x20x5 HDPE BLACK	
9	1		SPACER NYLON 10.5x20x7 HDPE	
10	2	600229-99-0	LOCK NUT M10 fzb ISO 7040	
11	1	1821471	HANDLE INCL. WIRE	
12	1		HOLDER HANDLE	
13	2		SET SCREW ISO 4026 M&x5 45H	
14	1	600189-99-0	BOLT MC6S 5x10 fzb	
15	1	600226-99-0	LOCK NUT M5 FZB	
16	1		BUSHING Ø25	
17	1		HOLDER WIRE	
18	1	600238-99-0	WASHER BRB 6.4X12 FZB	
19	1	600194-99-0	BOLT MC6S 6x20 fzb	
20	1	600227-99-0	LOCK NUT M6 FZB	
21	1		HANDLE MAN.CONTROL	
22	1	601823-00-0	PLAST KNOB RECT 4x16x30	
23	2	600188-99-0	BOLT MC6S 5x 8 fzb	
24	1		GAS SPRING 110 mm 550 N	
24	1		GAS SPRING 110 mm 350 N	
24	1		GAS SPRING 110 mm 250 N	
25	1		HOLDER WIRE	
26	1		PIN WIRE	
27	1	601157-99-0	BOLT MC6S 8x 55 fzb	
28	2		SPACER Ø16	
29	1	600228-99-0	LOCK NUT M8 FZB	
30	1	601231-99-0	BOLT MC6S 10x 55 fzb	
31	2	600241-99-0	WASH BRB 10.5x20x2 fzb	
32	2		SPACER 10,5x20x10	
33	1	600229-99-0	LOCK NUT M10 fzb ISO 7040	
34	1	1821759	WIRE ADJ BACKREST	
35	1	1825426	CTRL MAN BACK CII 250N	250 Nm
35	1	1825427	CTRL MAN BACK CII 350N	350 Nm
36	1		SCREW ASSEMBLY	
37	1		ADAPTER	
38	2	600241-99-0	WASH BRB 10.5x20x2 fzb	
39	1	601075-99-0	BOLT ESLOK 8x30 fzb	
40	2	600239-99-0	WASHER BRB 8.4X16 FZB	
41	1	600228-99-0	LOCK NUT M8 FZB	
42	1	1821495	PWR CTRL BACK CII X850	
43	1		ACTUATOR RE25 196+80 2xØ13,1	
44	2	601231-99-0	BOLT MC6S 10x 55 fzb	
45	4	600241-99-0	WASH BRB 10.5x20x2 fzb	
46	4	1825286	WASHER 13,5x22x3 PE BLACK	
47	2	302330-99-0	ACTUATOR BUSSING 30MM	
48	2	600229-99-0	LOCK NUT M10 fzb ISO 7040	
49	1	1824726	CABLE ADAPTER BACKR ACTU	

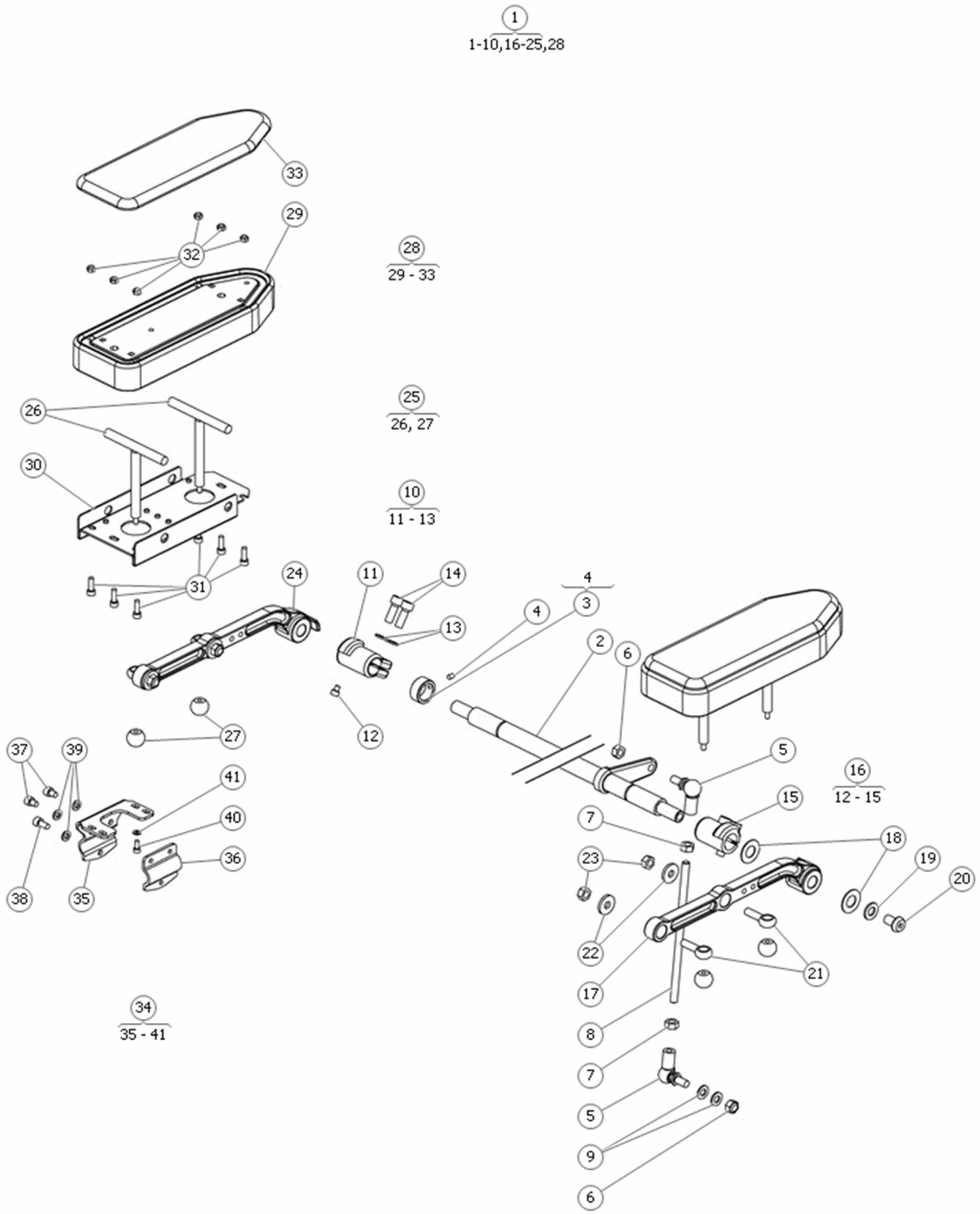
1
1-10,16-25,28
33
29
32
28
29 - 33
26
25
26, 27
30
10
11 - 13
31
24
11
14
13
4
3
4
2
6
12
27
37
39
41
40
36
38
35
5
16
12 - 15
15
7
18
23
19
20
22
21
17
34
35 - 41
8
7
5
9
6

Pos	Qty	Stock Code	Description	Remark
1	1	305267-28-0	ARMREST KIT	
1	1	305267-28-0	ARMREST KIT	
1	1	305267-38-0	ARMREST RECLINING 35/40CM	
1	1		ARMREST ASSY PLG +50	
2	1	302722-99-0	ARMSUPPORT ROD 40CM	
2	1	304968-99-0	ROD PARALLEL ARMSUPPORT	
3	1	301658-99-0	STOP COLLAR ARMREST C CII	
4	1	600546-99-0	SET SCREW SK6SS 5x6	
5	2	601415-99-0	ANGLE LINK AS M 8 fzb	
6	2	600228-99-0	LOCK NUT M8 FZB	
7	2	600233-99-0	NUT M6M 8 BHB FZB	
8	1	305458-99-0	BOLT PS 8x175 fzb	
9	2	600239-99-0	WASHER BRB 8.4X16 FZB	
10	1	1822340	CLAMP RING ARMR RIGHT	
11	1		CLAMP RIGHT	
12	2	601126-99-0	BOLT MC6S 5x 6 fzb	
13	4	601427-99-0	WASH BRB 8.4x15x1.6 fzb	
14	4	601127-99-0	BOLT MC6S 8x 22 fzb	
15	1		CLAMP LEFT	
16	1	1822339	CLAMP RING ARMR LEFT	
17	1	1820250	ARMR BRACK PLG V.2 LEFT	
18	4	600700-99-0	CUP SPRING	
19	2	600241-99-0	WASH BRB 10.5x20x2 fzb	
20	2	600701-99-0	BOLT K6S 10X16 FZB	
21	4	303003-99-0	LINK BOLT PARALLEL ARM-	
22	4	305390-99-0	WASH 8.5*23*3 FZB	
23	4	600228-99-0	LOCK NUT M8 FZB	
24	1	1820249	ARMR BRACK PLG V.2 RIGHT	
25	1	1824007	ENHANCEMENT KIT ARMREST	
25	1	306025-99-0	ARM SUPPORT HIGH ADAPTION	
26	1	1824007	ENHANCEMENT KIT ARMREST	
26	1		BRACKET LONG	
27	4	601395-00-0	HANDLE KNOB 20 M5	
28	2	1822782	ARMREST 250 FABRIC	FABRIC
28	2	1822783	ARMREST 300 FABRIC	FABRIC
28	2	1822784	ARMREST 350 FABRIC	FABRIC
28	2	1822785	ARMREST 400 FABRIC	FABRIC
28	2	1822786	ARMREST 250	SKAI
28	2	1822787	ARMREST 300	SKAI
28	2	1822788	ARMREST 350	SKAI
28	2	1822789	ARMREST 400	SKAI
29	1		ARMREST 400	
29	1		ARMREST 350	
29	1		ARMREST 300	
29	1		ARMREST 250	
30	1	1821918	ARMR GUIDE PLATE 400 PLG	
30	1	1822068	ARMR GUIDE PLATE 350 PLG	
30	1	1822153	ARMR GUIDE PLATE	
31	6	601165-99-0	BOLT MC6S 5x16 fzb	
32	6	600226-99-0	LOCK NUT M5 FZB	
33	1	1825297	PAD UPHOLST 250	FABRIC
33	1	1825298	PAD UPHOLST 300	FABRIC
33	1	1825299	PAD UPHOLST 350	FABRIC
33	1	1825300	PAD UPHOLST 400	FABRIC
33	1	1825301	PAD SKIN 250	SKAI
33	1	1825302	PAD SKIN 300	SKAI
33	1	1825303	PAD SKIN 350	SKAI
33	1	1825304	PAD SKIN 400	SKAI
34	1	302719-99-0	PANEL HOLD BRACK	
35	1		ANGEL	
36	1		HOLDER	
37	2	601359-99-0	BOLT MC6S 6x 8 fzb	
38	1	600192-99-0	BOLT MC6S 6x12 fzb	
39	3	600238-99-0	WASHER BRB 6.4X12 FZB	
40	1	600183-99-0	BOLT MC6S 4x10 fzb	
41	1	601296-99-0	WASHER BRB 4.3x 9 fzb	

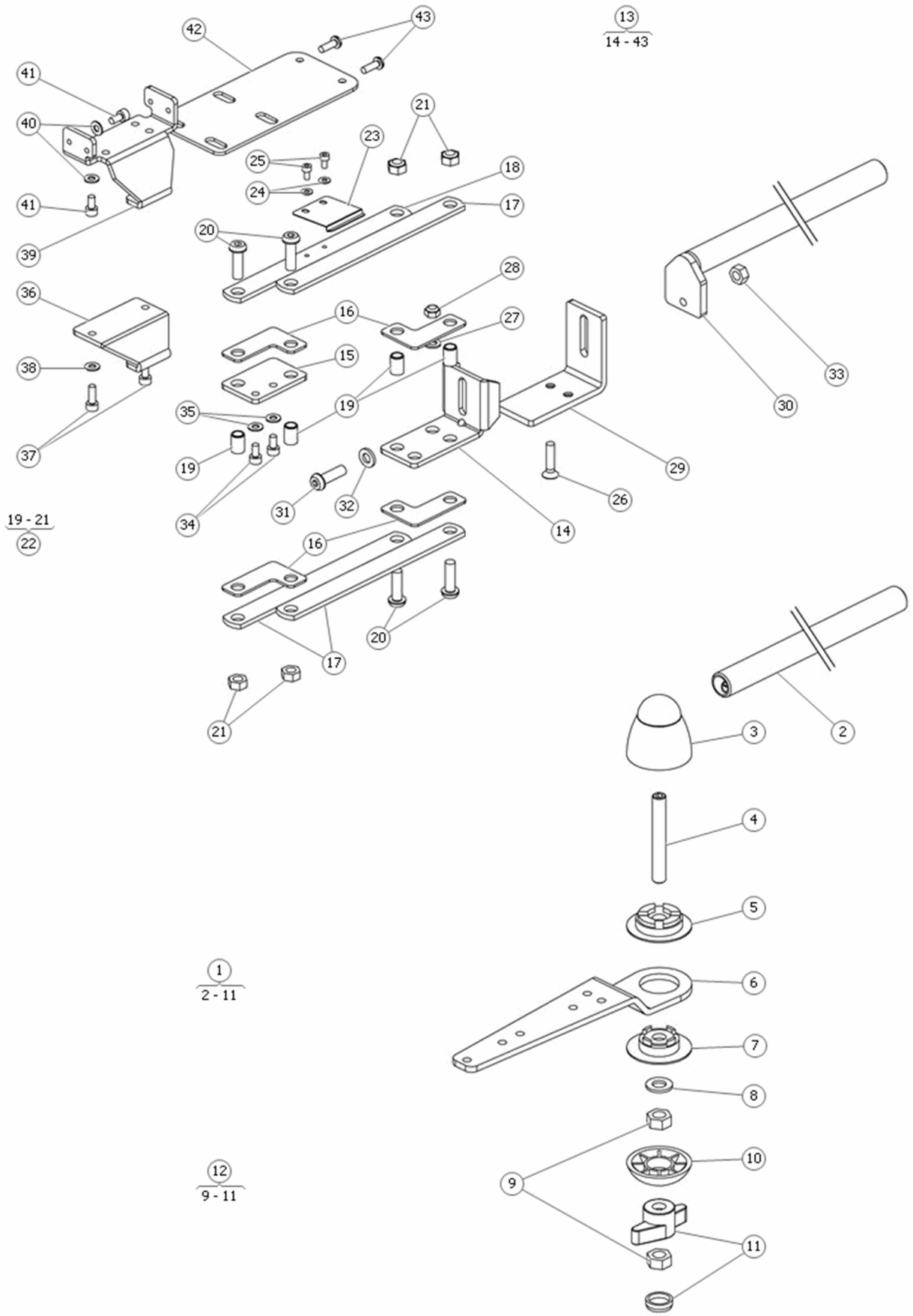
13
14 - 43
19 - 21
22
1
2 - 11
12
9 - 11

Pos	Qty	Stock Code	Description	Remark
1	1	309301-99-0	PANELHOLD 335 HI	
1	1	310040-99-0	PANELHOLD 335 LOW	
1	1	310041-99-0	PANELHOLD 435 HI	
1	1	310042-99-0	PANELHOLD 435 LOW	
2	1		TUBE L=180	
2	1		TUBE L=270	
3	1		HINGE	
4	1		SCREW, ISO 4029 M8x60 A2	
5	1		LOCK WASHER	
6	1		PLATE PANELHOLDER	
7	1		LOCK WASHER	
8	1	600239-99-0	WASHER BRB 8.4X16 FZB	
9	1	600228-99-0	LOCK NUT M8 FZB	
10	1		WASHER CONCAVE	
11	1		LOCK HANDLE 8 (for nut 13mm)	
12	1	1825556	ADJUSTMENT KNOB KIT	
13	1	1821782	PANEL HOLD PLG LEFT	Left
13	1	1826772	PANEL HOLDER PLG RIGHT C	Right
14	1		PLATE	
15	1		PLATE	
16	1		PLATE	
17	1		PLATE HINGE	
18	1		PLATE HINGE	
19	1		SPACER L=12 Ø8h9/Ø6+0.2/-0	
20	1	601370-99-0	BOLT K6S 6x20 fzb	
21	1	600227-99-0	LOCK NUT M6 FZB	
22	1	1822319	REPAIR KIT PIVOT, RETRACT	
23	1	306814-99-0	HOLD DOWN SPRING P.HOLDER	
24	1	601202-99-0	WASH BRB 3.2x 7 fzb	
25	1	601346-99-0	BOLT MC6S 3x 6 fzb	
26	1		SCREW ISO 10642 M5x22 Fe/Zn	
27	1	600237-99-0	WASH BRB 5.3x10x 1 fzb	
28	1	600226-99-0	LOCK NUT M5 FZB	
29	1		PLATE REINFORCEMENT	
30	1		PANELHOLDER	
31	1	601370-99-0	BOLT K6S 6x20 fzb	
32	1	600238-99-0	WASHER BRB 6.4X12 FZB	
33	1	600227-99-0	LOCK NUT M6 FZB	
34	1	600182-99-0	BOLT MC6S 4x 8 fzb	
35	1	601296-99-0	WASHER BRB 4.3x 9 fzb	
36	1		PLATE	
37	1	600184-99-0	BOLT MC6S 4x12 fzb	
38	1	601296-99-0	WASHER BRB 4.3x 9 fzb	
39	1	309958-99-0	BRACK PANEL/SW.BOX P+	
40	1	601296-99-0	WASHER BRB 4.3x 9 fzb	
41	1	600182-99-0	BOLT MC6S 4x 8 fzb	
42	1		BRACKET EXTRA PANEL	
43	1	601102-99-0	BOLT K6S 4x12 fzb	

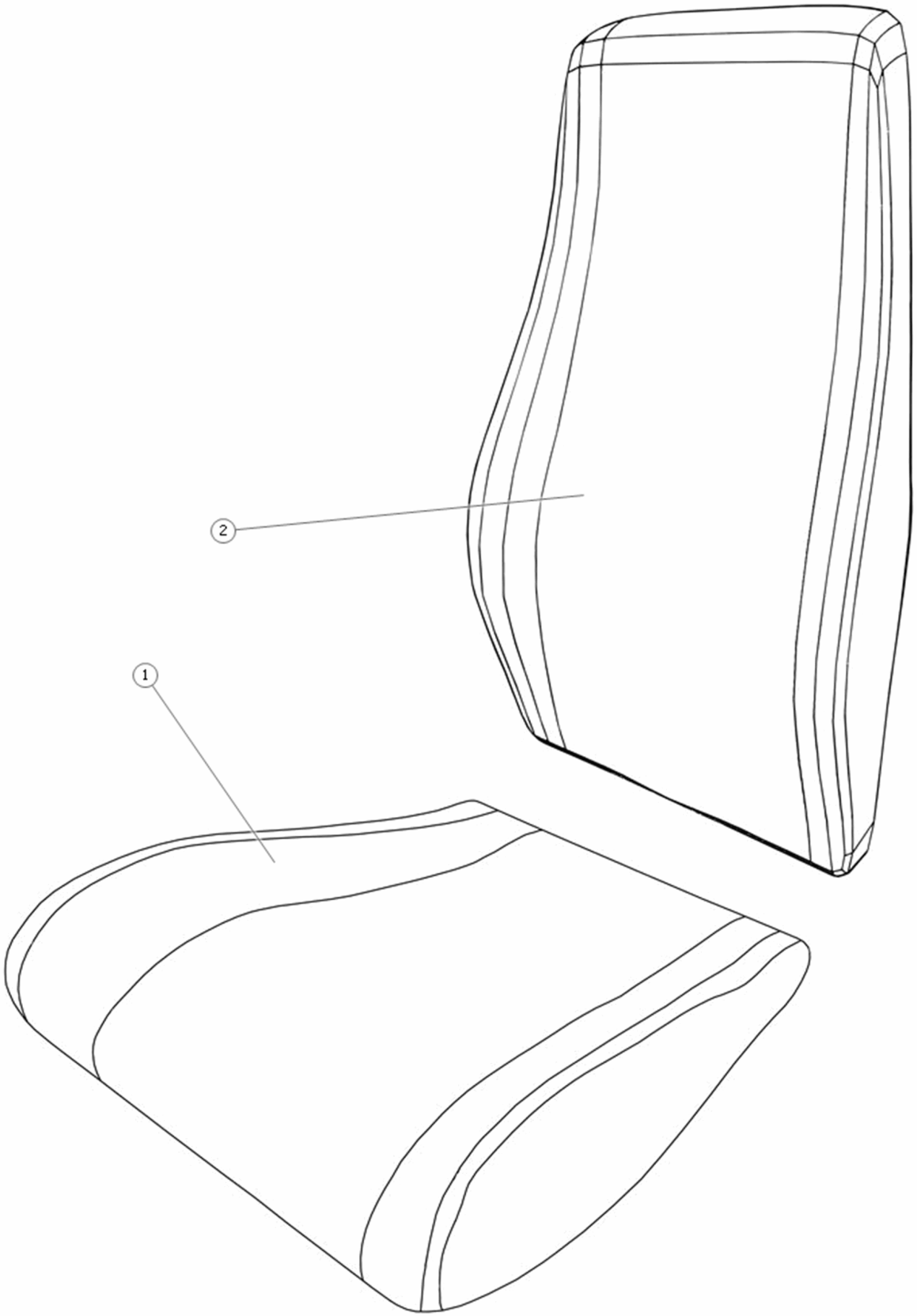
2
1

Pos	Qty	Stock Code	Description	Remark
1	1	306431-99-60-0	SEAT CUSH ERGO 450x500	
1	1	306431-99-80-0	SEAT CUSHION ERGO CORPUS	
1	1	306431-99-90-0	SEATCUSHION ERGO 42.5*	
1	1	306470-99-20-0	SEATCUSHION ERGO 47.5*	
1	1	306470-99-60-0	SEAT CUSH ERGO 500x500	
1	1	306470-99-80-0	SEAT CUSH ERGO 500x500	
1	1	306470-99-90-0	SEATCUSHION ERGO 47.5*	
1	1	306471-99-60-0	SEAT CUSH ERGO 450x560	
1	1	306471-99-80-0	SEAT CUSH ERGO 450x560	
1	1	306471-99-90-0	SEATCUSHION ERGO 42.5*	
1	1	306472-99-20-0	SEATCUSHION ERGO 4735*	
1	1	306472-99-60-0	SEAT CUSH ERGO 500x560	
1	1	306472-99-80-0	SEAT CUSH ERGO 500x560	
1	1	306735-99-20-0	SEATCUSHION ERGO 42.5*	
1	1	306735-99-60-0	SEAT CUSHION ERGO 450x420	
1	1	306735-99-80-0	SEAT CUSH ERGO 450x420	
1	1	306735-99-90-0	SEATCUSHION ERGO 42.5*	
1	1	310096-99-60-0	SEAT CUSH COMFORT STD	
1	1	310096-99-80-0	SEATCUSH COMFORT STD	
1	1	311152-99-60-0	SEAT CUSHION COMFORT 450x	
1	1	311153-99-60-0	SEAT CUSHION COMFORT 500x	
1	1	311154-99-60-0	SEAT CUSHION COMFORT 500x	
1	1	311156-99-60-0	SEAT CUSHION ERGO 420x370	
1	1	311393-99-60-0	SEAT CUSHION COMFORT 450x	
1	1	311393-99-80-0	SEAT CUSH COMFORT 450x530	
1	1	311394-99-60-0	SEAT CUSHION COMFORT 500x	
1	1	311394-99-80-0	SEAT CUSH COMFORT 500x530	
1	1	311398-99-60-0	SEAT CUSHION 450x530 FABR	
1	1	311398-99-90-0	SEAT CUSH ERGO 450x530	
1	1	311401-99-60-0	SEAT CUSH ERGO 500x530	
1	1	311401-99-90-0	SEAT CUSH ERGO 500x530	
1	1	311403-99-60-0	SEAT CUSHION COMFORT 450x	
1	1	311403-99-80-0	SEAT CUSH COMFORT 450x450	
1	1	311494-99-60-0	SEAT CUSHION COMFORT 450X	
1	1	311494-99-80-0	SEAT CUSH COMFORT 450x420	
2	1	1824854	BACKR CUSH 370x470 MESH	
2	1	1824856	BACKR CUSH 420x470 MESH	
2	1	1824857	BACKR CUSH 470x470 MESH	
2	1	306430-99-20-0	BACKREST CUSHION ERGO 40/	
2	1	306430-99-60-0	BACKR CUSH ERGO 420x600	
2	1	306430-99-80-0	BACKR CUSH ERGO 420x600	
2	1	306430-99-80-0	BACKR CUSH ERGO 420x600	
2	1	306430-99-90-0	BACKRESTCUSHION ERGO 60/	
2	1	306473-99-20-0	BACKREST CUSHION ERGO 45/	
2	1	306473-99-60-0	BACKR CUSH ERGO 470x600	
2	1	306473-99-80-0	BACKR CUSH ERGO 470x600	
2	1	306473-99-80-0	BACKR CUSH ERGO 470x600	
2	1	306473-99-90-0	BACKRESTCUSHION ERGO 60/	
2	1	306475-99-60-0	BACKR CUSH 370x600 CII	
2	1	306475-99-80-0	BACKR CUSH ERGO 370x600	
2	1	306475-99-90-0	BACKRESTCUSHION ERGO 60/	
2	1	307506-99-60-0	BACKR CUSH ERGO 370x530	
2	1	307507-99-60-0	BACKR CUSH ERGO 420x530	
2	1	307508-99-60-0	BACKR CUSH ERGO 470x530	

When you order spare parts, the following must always be specified:

- The product model (for example, power wheelchair C300).
- The description of the part.
  - always use the description used in this catalog.
- The entire part number.
- The quantity.

NB! *In some cases, parts appear in the spare part catalog without a part number. This means that the part cannot be ordered from Permobil. We have, however, chosen to describe it for your information. Standard components such as screws, nuts, washers and similar parts can be purchased in an ordinary shop using the information in this catalog.*

Description of Positioning list

The positioning list consist of:

A = Indicates the sparepart-group covered by the catalog.
B = Indicates part of the sparepart-group.

C = Under C there are five columns:

1 = Pos.no: Position number
2 = Pcs: Total number of given pos-no.
3 = Part no.: Part number
4 = Description: Article name
5 = Remark: Reserved for additional information such as reservations, restrictions etc.

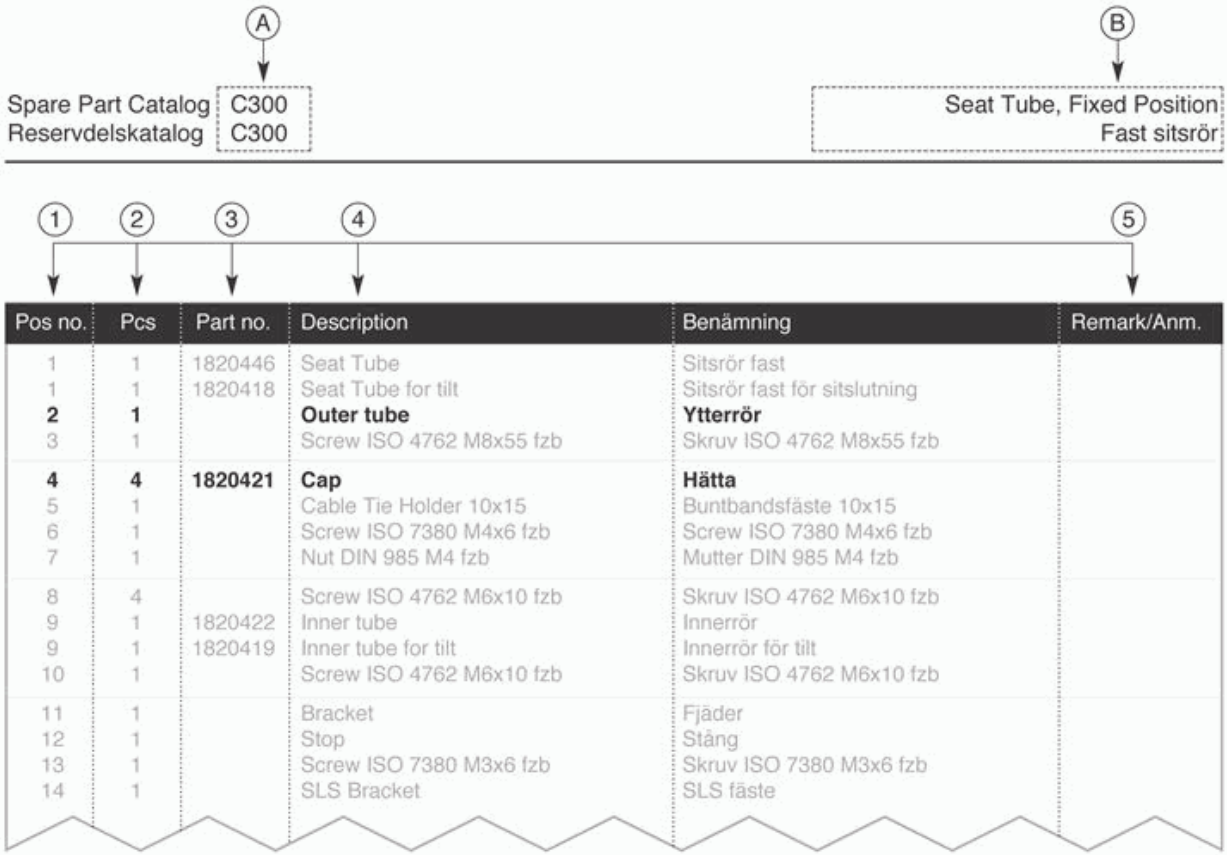

Pos no.	Pcs	Part no.	Description	Benämning	Remark/Anm.
1	1	1820446	Seat Tube	Sitsrör fast	
1	1	1820418	Seat Tube for tilt	Sitsrör fast för sitslutning	
2	**1**		**Outer tube**	**Ytterrör**	
3	1		Screw ISO 4762 M8x55 fzb	Skruv ISO 4762 M8x55 fzb	
4	**4**	**1820421**	**Cap**	**Hätta**	
5	1		Cable Tie Holder 10x15	Buntbandsfäste 10x15	
6	1		Screw ISO 7380 M4x6 fzb	Screw ISO 7380 M4x6 fzb	
7	1		Nut DIN 985 M4 fzb	Mutter DIN 985 M4 fzb	
8	4		Screw ISO 4762 M6x10 fzb	Skruv ISO 4762 M6x10 fzb	
9	1	1820422	Inner tube	Innerrör	
9	1	1820419	Inner tube for tilt	Innerrör för tilt	
10	1		Screw ISO 4762 M6x10 fzb	Skruv ISO 4762 M6x10 fzb	
11	1		Bracket	Fjäder	
12	1		Stop	Stång	
13	1		Screw ISO 7380 M3x6 fzb	Skruv ISO 7380 M3x6 fzb	
14	1		SLS Bracket	SLS fäste	

Part

A part consists of one or more parts. If a part consists of several parts, a bracket in connection with the part's item bubble is used to show the parts included in the part in the exploded views. See example 1.

Quantity

The quantity specified in front of a part is the total quantity for the entire product.

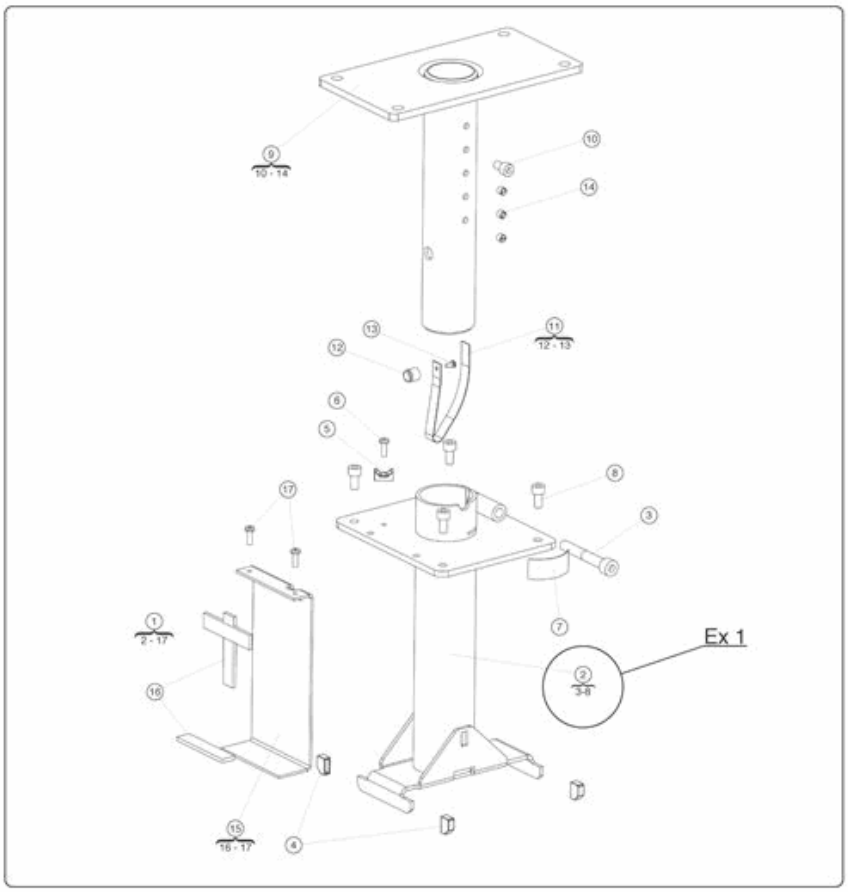

Example 1:

The fixed seat tube, pos 2, includes pos 3 to 8, that are indicated in the bracket below (see above).

Example 2:

If a outer tube, pos 2, is ordered, the quantity is 1. In other words, there is just one outer tube on the chassis. However, if you look at the number of parts included, the quantity may vary. For example, in pos 4, the complete outer tube comprises 4 parts.

Vid beställning av reservdelar skall följande alltid anges:

- Produktmodell (ex.vis elrullstol C300).
- Artikelns benämning.
  - använd samma benämning som i denna reservdelskatalog vid beställning.
- Hela artikelnumret.
- Antal.

OBS! *I reservdelskatalogen förekommer i vissa fall detaljer utan angivet artikelnr. Det innebär att detaljen inte går att beställa från Permobil, men vi har ändå valt att beskriva dem för din information. Standardkomponenter så som skruv, mutter, bricka och liknande detaljer kan införskaffas i den ordinarie detaljhandeln med hjälp av informationen i denna katalog.*

Beskrivning av positionslistor

Positionslistan består av:

A = Visar vilken produkt katalogen beskriver.
B = Visar vilken del av produkten som visas på aktuell sida.
C = Under C finns fem kolumner:

- **1** = Pos.no: Positionsnummer
- **2** = Pcs: Antal detaljer som ingår i aktuellt pos.nummer
- **3** = Part no.: Artikelnummer
- **4** = Benämning: Artikelns benämning (svensk och engelsk benämning)
- **5** = Anmärkning: Plats för ev. tilläggsinformation, förbehåll etc.

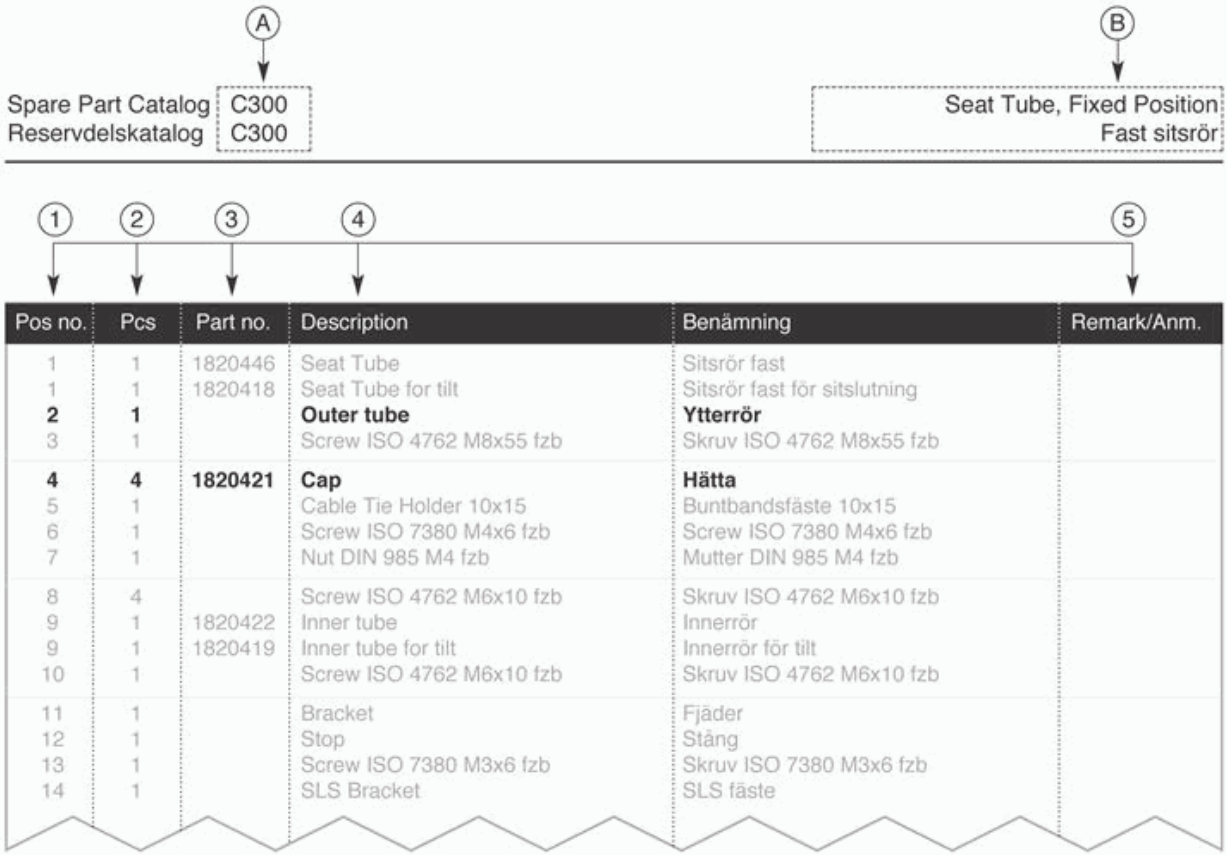

Pos no.	Pcs	Part no.	Description	Benämning	Remark/Anm.
1	1	1820446	Seat Tube	Sitsrör fast	
1	1	1820418	Seat Tube for tilt	Sitsrör fast för sitslutning	
2	**1**		**Outer tube**	**Ytterrör**	
3	1		Screw ISO 4762 M8x55 fzb	Skruv ISO 4762 M8x55 fzb	
4	**4**	**1820421**	**Cap**	**Hätta**	
5	1		Cable Tie Holder 10x15	Buntbandsfäste 10x15	
6	1		Screw ISO 7380 M4x6 fzb	Screw ISO 7380 M4x6 fzb	
7	1		Nut DIN 985 M4 fzb	Mutter DIN 985 M4 fzb	
8	4		Screw ISO 4762 M6x10 fzb	Skruv ISO 4762 M6x10 fzb	
9	1	1820422	Inner tube	Innerrör	
9	1	1820419	Inner tube for tilt	Innerrör för tilt	
10	1		Screw ISO 4762 M6x10 fzb	Skruv ISO 4762 M6x10 fzb	
11	1		Bracket	Fjäder	
12	1		Stop	Stång	
13	1		Screw ISO 7380 M3x6 fzb	Skruv ISO 7380 M3x6 fzb	
14	1		SLS Bracket	SLS fäste	

Artikel

En artikel består av en eller flera detaljer. Om en artikel består av flera detaljer är det markerat i sprängskisserna med ett klamer i anslutning till artikelns posbubbla där det står vilka detaljer som ingår i artikeln. se Ex 1.

Antal

Det angivna antalet framför en artikel är det sammanlagda antalet för hela produkten.

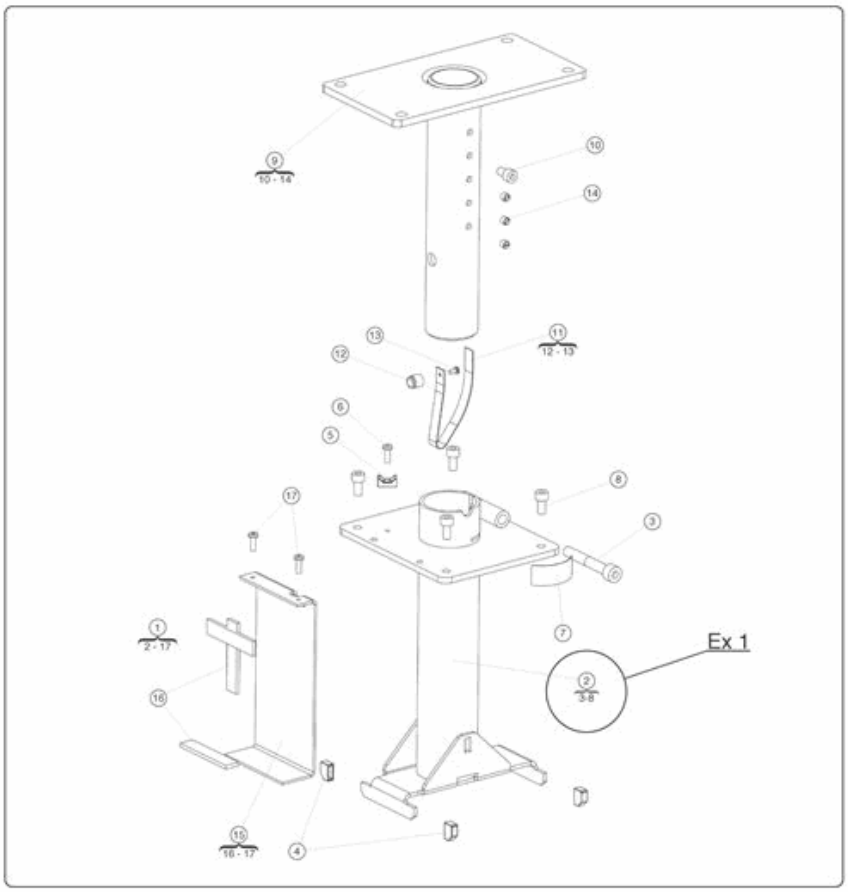

Ex 1:

I fast sitsrör Pos. 2, ingår poserna 3till 8 som står i klamret under. (se ovan)

Ex 2:

Beställs ettYtterrör, pos. 2, så står det att antalet är 1. Det finns med andra ord bara ett ytterrör på chassit. Men om man tittar på antalet i ingående detaljer, så kan antalet variera, i tex. pos 4 är det 4 st för att ytterröret ska vara komplett.

PAB no: 1264-1